VERTICAL EXPRESS
9280 Crestwyn Hills
Memphis, TN 38125

1-866-HELP-TKE

INFORMATION BULLETIN

Thursday, November 12, 2020

Equipment: Torin TGL1 and TGL2 Machines

Background: Torin TGL1 and TGL2 machines - AUL is provided.

Description: The drive sheave on some TGL1 and TGL2 machines may move on the tapered machine shaft

Symptoms: Excess drive sheave runout and brake caliper misalignment causing accelerated brake shoe (lining) wear (visible brake dust) and potential bearing damage

Correction: Using the attached job lists, perform the inspections defined below.

- Brake Inspection Job List: Appendix C
  - Inspection (Appendix A)
  - Runout Test (Appendix B) if symptoms of failure are detected
- Runout Measurement Job List: Appendix D
  - Inspection (Appendix A)
  - Runout Test is required (Appendix B).

Appendix A: Brake Inspection Procedure

Tools Required:

1. Caliper
2. Flashlight

Procedure:

1. Visually inspect for brake dust, uneven brake shoe wear, or excess brake caliper heat.
2. Measure distance between Brake Shoes per Torin Manual No. TDI-300-TGL, pg. 20 Brake Shoe Wear Check.

7.2 Brake Shoe Wear Check

WARNING! If the brake lining wears too much, the brake will be disabled.

Suggest check cycle

Every 1 year

Benchmark Criteria

The brake shoe wear must be <1mm (0.04"). Use the Vernier caliper to check gap "a1" at point 1, 2, 3, and 4 between fixed plate and moving core. The gap "a1" should be >30mm (1.20"), when the brake is closed. Otherwise replace the brake shoe or the whole brake assembly. See Figure 13.

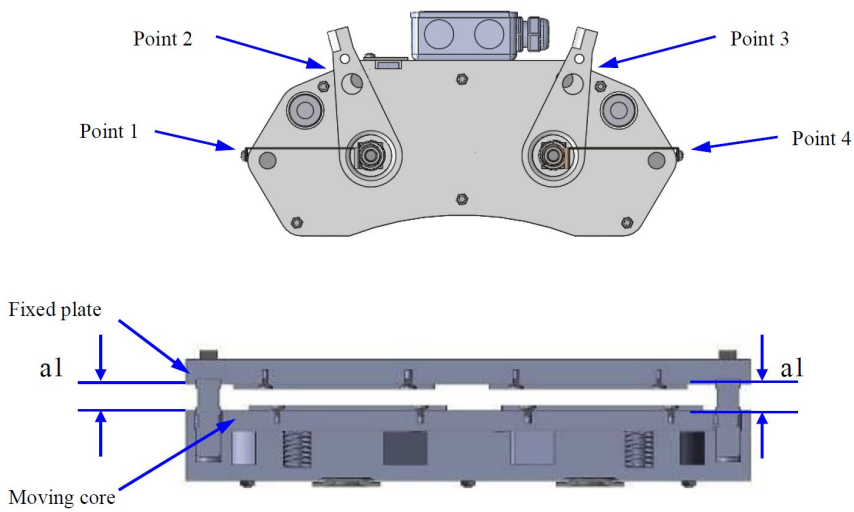

Figure 13 Brake Shoe wear check

3. Record the Brake Shoe distances (a1) in the table at the end of this Service Bulletin.

4. If the Brake Shoe distance (a1) < 30mm (1.181”), remove the car from service and perform Appendix B: Runout Test.

5. The elevator must remain out of service until the brake shoes or the brake caliper assembly is replaced, and a 125% brake test is performed.

Appendix B: Runout Test:

Tools Required:

Tools to be acquired from ITS

1. Runout gauge with 0.0005” graduations

2. Magnetic base for runout gauge

Setup:

1. Using Door Disconnect, remove the elevator from service.

2. Run the elevator to the top landing.

3. Place the Controller Inspection switch in the ON position and Controller Stop Switch to STOP.

4. Attach the magnetic base in flat location on machine bedplate so the dial indicator can reach the brake disc and there will be no rocking/movement of the magnetic base, see picture below

5. Adjust the dial indicator so it is perpendicular to brake disc and centered on the braking surface. See picture below

6. For the final adjustment, the dial indicator pin should be depressed ~0.100” to allow the pin to move in or out so measurement can be made in both directions.

7. Tighten the magnetic base/arm to prevent arm movement

Procedure:

1. Run the machine at inspection speed at least one drive sheave revolution, recording the minimum and maximum measurements on the dial indicator in the table at the end of this Service Bulletin.

2. Repeat the measurement twice, recording the minimum and maximum measurements for each run in the table at the end of this Service Bulletin.

3. Calculate the total runout by subtracting the minimum measurement from the maximum measurement for each run. See the example below:

	Maximum		Minimum	Total Runout
Run 1	0.006”	(-)	0.001”	0.005”
Run 2	0.002”	(-)	-0.003”	0.005”
Run 3	0.003”	(-)	-0.003”	0.006”

4. Pass/Fail Criteria: The total runout should be less than 0.006”. If the total runout is:

   a. Result < 0.006”, PASS: No action required at this time. Continue to monitor every 6 months

   b. 0.006” < Result < 0.012”: Fail, order replacement parts and schedule rebuild.

      - Can continue to run the machine until rebuild is performed, but must monitor weekly to ensure <0.012

   c. Result > 0.012”: Fail, order replacement parts and schedule rebuild.

      - Machine must be shut down until rebuild is performed

5. Monitor machines: - Inspections described above must be performed every 6 months unless a rebuild has been performed.

How to order replacement materials:

1. Contact Field Engineering

   a. Provided them with the following:

      - Job Number
      - Machine Serial #
      - What material needs to be replaced?

1. Rebuild kit with subframe and tool kit

2. Brake shoes: Needed if a1 < 30mm (1.181”).

Rebuild Kit order instructions, if required:

1. Rebuild kit with subframe and tool kit
    - Field Engineering will provide the correct part number kit to order
2. Brakes Shoes
    - Field Engineering will provide the correct part number kit to order

Contact tke.warranty@thyssenkrupp.com with the part number of the rebuild kit required to order the correct rebuild kit

Brake Inspection Job List: Appendix C

399	VERTX - MISC.	CCE720	43-25 HUNTER STREET
399	VERTX - MISC.	CCE721	43-25 HUNTER STREET

Runout Measurement Job List: Appendix D

No jobs impacted.