VERTICAL EXPRESS

LD-03 Linear Door Operator with UIT

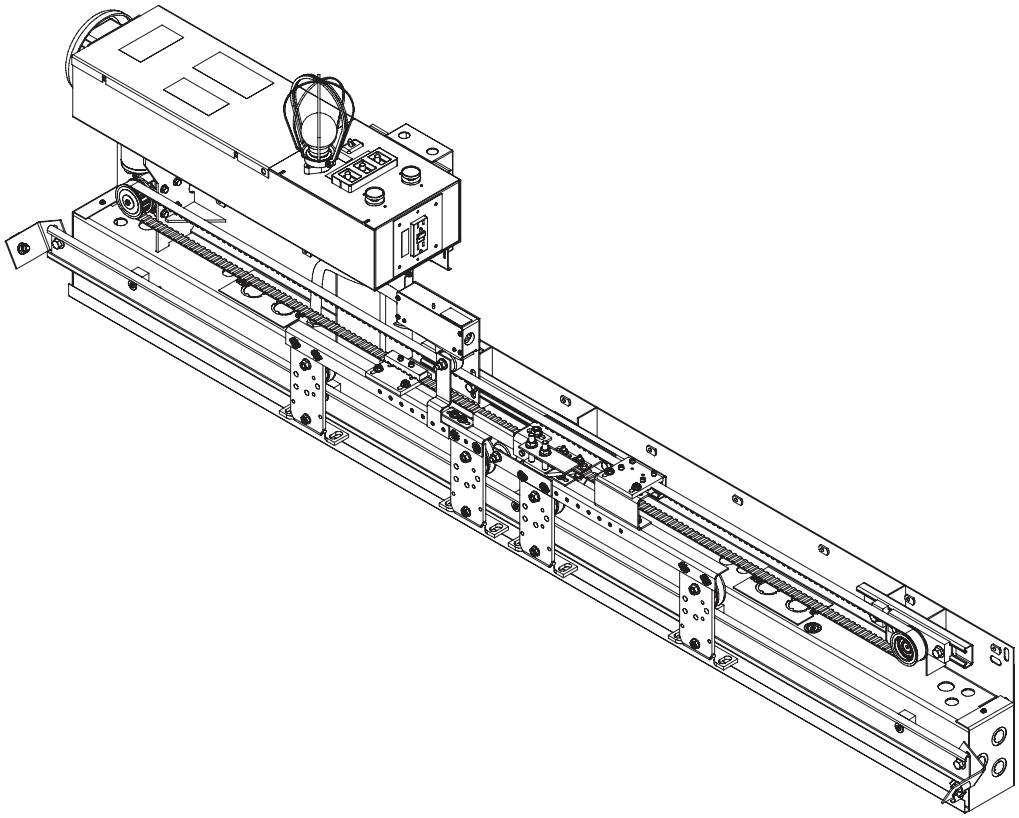

Every attempt has been made to ensure that this documentation is as accurate and up-to-date as possible. However, Vertical Express assumes no liability for consequences, directly or indirectly, resulting from any error or omission. The material contained herein is subject to revision. Please report any problems with this manual to Vertical Express, P.O. Box 2019, Memphis, Tennessee 38101.

Vertical Express • P.O. Box 2019 • Memphis, Tennessee 38101

© 2003, 2012 Vertical Express. All rights reserved.
Published May, 2012
Second Edition
Printed in the United States of America

Manual Number: 89158 v.2.0

LD-03 Linear Door Operator with UIT

Contents

Safety Precautions . . . 3
General Safety . . . 3
Electrical Safety . . . 3
Mechanical Safety . . . 4
Arrival of Equipment . . . 5
Specifications . . . 7
Installation . . . 7
Mechanical Installation . . . 7
Wiring . . . 7
Setup and Adjustment . . . 8
Setup using the UIT . . . 8
Power-up . . . 8
Direction Check . . . 9
Auto Null . . . 9
Door Scan . . . 10
Profile Adjustments . . . 10
Closing Force . . . 11
Closing Kinetic Energy . . . 11
Door Closing Profile . . . 12
Door Opening Profile . . . 13
Diagnostics . . . 14
The User Interface Tool (UIT) . . . 14
Overview of Adjustments, Parameters, and Commands . . . 14
The UIT Menu Tree . . . 15
Adjustments . . . 16
Diagnostic Adjustments . . . 18
Profile Adjustments . . . 21
System Adjustments . . . 23
Parameters . . . 24
CAN Parameters . . . 24
Control Parameters . . . 24
Diagnostic Parameters . . . 25
Door Parameters . . . 26
System Parameters . . . 26
Fault Codes . . . 27

Contents
(continued)

Technical Information 30
Record Flight Time 30
Upload FLASH Program Software 30
Upload Generic Software 30
Upload the Door Operator Profile 32
Determine the Software Version/Revision 33
Cycle Mode 33
Restart the IGBT Power Module 34
Troubleshooting 35
Power Up Verification 35
LED Verification 36
Power Supplies Check 36
Checking the Encoder 38
Troubleshooting Guide 39
Maintenance 42
Change the Door Operator Belt (Single Speed) 42
Change the Door Operator Belt (Center Opening) 43
Replacement Parts 44
1504BK Single Speed Left and Right Hand Assemblies 44
1504BL Center Opening Assemblies 46
1504BV 2-Speed Left and Right Hand Assemblies 48
186CP Car Top Box 50

Safety Precautions

IMPORTANT! **Read this page before any work is performed on elevator equipment. The procedures contained in this manual are intended for the use of qualified elevator personnel. In the interest of your personal safety and the safety of others, do not attempt any procedure that you are not qualified to perform.**

All procedures must be accomplished in accordance with the applicable rules in the latest edition of the National Electrical Code, the latest edition of ASME A17.1, and any governing local codes.

Terms in This Manual

CAUTION statements identify conditions that may result in damage to the equipment or other property if improper procedures are followed.

WARNING statements identify conditions that may result in personal injury if improper procedures are followed.

General Safety

Before applying power to the controller, check that all factory wire connections are tight on relays, contactors, fuse blocks, resistors, and terminals on cards and DIN rail terminals. Connections loosened during shipment may cause damage or intermittent operation.

Other specific warnings and cautions are found where applicable and do not appear in this summary. See the *Elevator Industry Field Employees' Safety Handbook* for electrical equipment safety information on installation and service.

Electrical Safety

All wiring must be in accordance with the National Electrical Code and be consistent with all state and local codes.

Use the Proper Fuse

To avoid fire hazards, use only a fuse of the correct type, voltage, and current rating. See the job specific drawings sheet (Power Supplies) for fusing information.

Electric shocks can cause personal injury or loss of life. Circuit breakers, switches, and fuses may not disconnect all power to the equipment. Always refer to the wiring diagrams. Whether the AC supply is grounded or not, high voltage will be present at many points.

Printed Circuit Cards

Printed circuit boards may be damaged if removed or installed in the circuit while applying power. Before installation and/or removing printed circuit boards, secure all power.

Always store and ship printed circuit cards in separate static bags.

Electrical Safety
(continued)

Mainline Disconnect

Unless otherwise directed, always Turn OFF, Lock, and Tag out the mainline disconnect to remove power from elevator equipment. Before proceeding, confirm that the equipment is de-energized with a volt meter. Refer to the *Elevator Industry Field Employees' Safety and Accident Prevention Program Manual* for the required procedure.

Test Equipment Safety

Always refer to manufacturers' instruction book for proper test equipment operation and adjustments.

Megger or buzzer-type continuity testers can damage electronic components. Connection of devices such as voltmeters on certain low level analog circuits may degrade electronic system performance. Always use a voltmeter with a minimum impedance of 1M Ohm/Volt. A digital voltmeter is recommended.

When Power Is On

To avoid personal injury, do not touch exposed electrical connections or components while power is ON.

Mechanical Safety

See the *Elevator Industry Field Employees' Safety Handbook* for mechanical equipment safety information on installation and service.

Revision Change Bars

Each revised page included in this manual will have a vertical line (change bar) to the left of the text that has been added or changed. The example at the left of this paragraph shows the size and position of the revision change bar.

Static Protection Guidelines

IMPORTANT! **Read this page before working with electronic circuit boards.**

Elevator control systems use a number of electronic cards to control various functions of the elevator. These cards have components that are extremely sensitive to static electricity and are susceptible to damage by static discharge.

Immediate and long-term operation of an electronic-based system depends upon the proper handling and shipping of its cards. For this reason, the factory bases warranty decisions on the guidelines below.

Handling

- Cards shipped from the factory in separate static bags must remain in the bags until time for installation.
- Anti-static protection devices, such as wrist straps with ground wire, are required when handling circuit boards.
- Cards must not be placed on any surface without adequate static protection.
- Only handle circuit cards by their edges, and only after discharging personal static electricity to a grounding source. DO NOT touch the components or traces on the circuit card.
- Extra care must be taken when handling individual, discrete components such as EPROMS (which do not have circuit card traces and components for suppression).

Shipping

- Complete the included board discrepancy sheet.
- Any card returned to the factory must be packaged in a static bag designed for the card.
- Any card returned to the factory must be packaged in a shipping carton designed for the card.
- “Peanuts” and styrofoam are unacceptable packing materials.

Note: Refer to the *Vertical Express Replacement Parts Catalog* to order extra static bags and shipping cartons for each card.

Failure to adhere to the above guidelines will VOID the card warranty!

This page
intentionally
left blank.

Specifications

- Maximum Door Opening Speed: 2 ft/s
- Maximum Combined Door Weight: 450 lbs.
  (weight is the combined car and hoistway door assemblies and components)
- Motor Horsepower: 1/6 HP
- Motor Voltage: 120 VDC
- Encoder: 500 pulses per revolution (built into motor gearbox)
- Drive Belt: 1/2” pitch, 3/4” wide, H series, trapezoidal timing belt
- Door Card: Universal Door Controller (UDC), closed-loop

Installation

Mechanical Installation

1. Place and fasten the operator. See Figure 1.
2. Install the door(s).
3. Install the clutch and pickup linkage.

Wiring

1. Route the door operator harness to the swing return, and connect the harness connectors to the appropriate connectors on the Car Wiring Interface Card (CWID).
2. Connect the safety edge cables to the safety edge box.

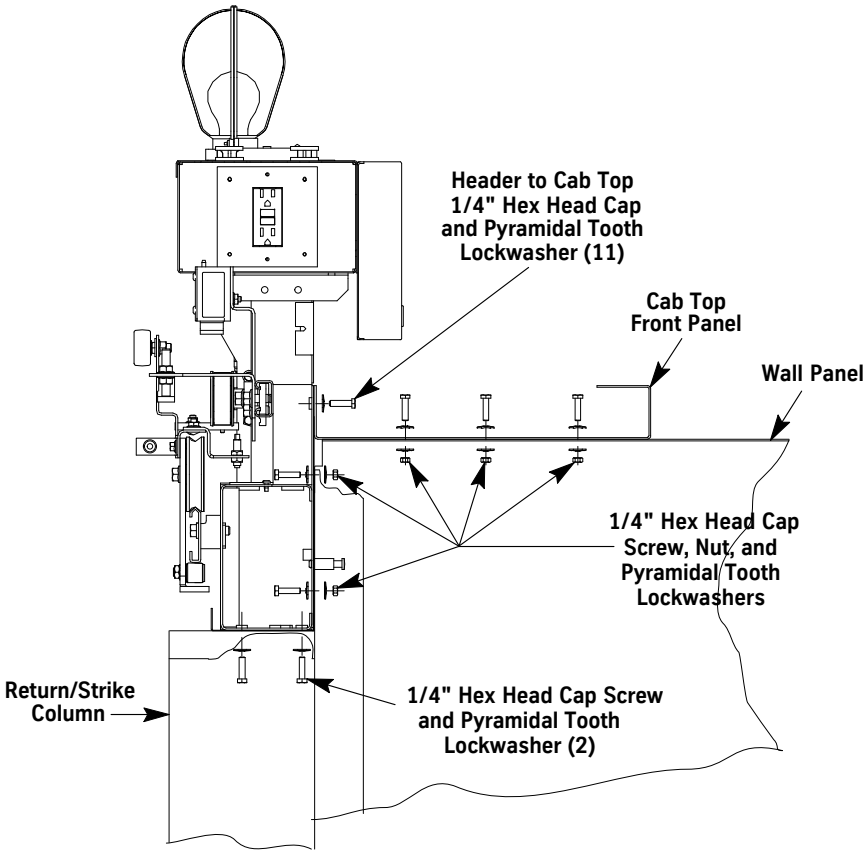

Figure 1 - Mount the Door Operator and Header Assembly to the Cab

Setup and Adjustment

Setup using the UIT

The Linear Door Operator (LD-03) is adjusted and configured by manufacturing. Only minor adjustments, if any, should be required at the job site.

CAUTION

The supplied configuration of the door operator uses adjustment and parameter values that are different from the default values shown in the Diagnostics Section. Using the Factory Defaults Command (FDF) could result in a maladjusted or non-functioning door operator.

Power-up

1. Place the car on Inspection Operation.

2. Verify that the following jumper settings and positions are correct. See Figure 2.
   - JP1 is ON 1 and 2.
   - JP2 is ON 2 and 3.
   - JP3 is OFF.
   - JP4 is Set (OFF = Front, ON = Rear).
   - JP5 is ON.

     Note: JP5 ON forces RS485 communications mode, and must have matching CPU Adjustments D12/D13=8.
   - JP6 is OFF.

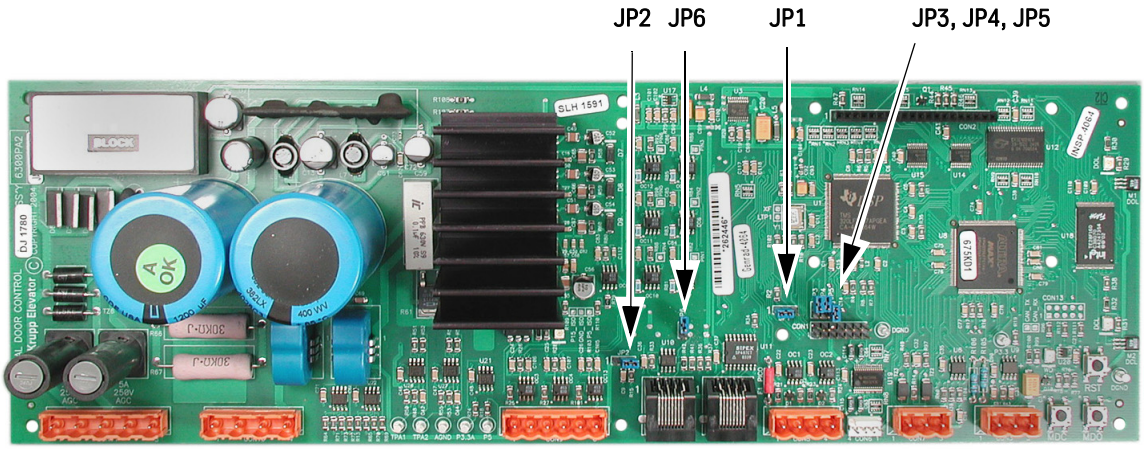

Figure 2 - Door Operator Card with Jumper Settings and Positions

3. Turn ON the mainline disconnect.

4. Verify that the VBUS and WD LEDs on the door card are ON.

5. Verify that the Harness Comm plug is on CON7.

Direction Check

CAUTION **To prevent automatic movement of the door while adjusting limit switches, place elevator on Inspection Operation.**

1. Check the DOL and DCL limits.
   a. Place the car on Inspection Operation.
   b. Press and hold MDO on the door card to open the door(s). Verify that the door opens fully and the DOL LED turns ON. If DOL/DCL do not appear to work, verify that the door adjustments ELI and LDO are set to 1,
      - If doors move in the open direction, continue with Step 1c.
      - If doors do not move in the open direction, use the UIT to change the value of LHO. See “LHO” on page 23, and cycle power must be completed.
      - Repeat Step 1b.
   c. Press MDC on the door card to close the door(s). Verify that the door closes fully, and that the DCL LED turns ON. If DOL/DCL do not appear to work, verify that the door adjustments ELI and LDO are set to 1.
   d. If the value for LHO was changed, save the change.
   e. Adjust the limit switch actuators (if necessary).

Auto Null

1. Start this procedure with the car on Inspection Operation and the doors FULLY CLOSED.
2. On the UIT, scroll to MAIN->DOOR->CMD->ANL (Autonull).
3. Press ENTER, and the UIT displays,

   ENT to AUTONULL
   ESC to exit
4. Press ENTER and, after autonull is complete, the UIT displays,

   AUTONULL COMPLETE
   Save to Flash
5. Save the autonull parameters to FLASH.
   a. Scroll to MAIN->SYSTEM->CMD->SAVETOFLASH, press ENTER, and the UIT displays,

      ENT to save
      ESC to exit
   b. Press ENTER, and the UIT displays,

      Adjs have been saved to FLASH

Door Scan

1. Place the car on Inspection Operation.
2. Make sure the door(s) is FULLY CLOSED.
3. On the UIT, scroll to MAIN->PROFILE1->CMD->LEARN TRAVEL.
4. Press ENTER, and the UIT displays,

   TRAVEL = (######)
   Ent to Re-Learn
5. Press ENTER, and the UIT displays,

   TRAVEL = 000
   Move Doors Now
6. Press and hold the MDO button until the DOL LED turns ON and the UIT displays,

   TRAVEL = (learned value)
   Save to Flash
7. Save the Door Scan to Flash.
   a. Scroll to MAIN->SYSTEM->CMD->SAVETOFLASH, press ENTER, and UIT displays,

      ENT to save
      ESC to exit

   b. Press ENTER, and the UIT displays,

      Adjs have been saved to FLASH

Profile Adjustments

1. Place the car at the appropriate landing of the profile that is to be adjusted.
2. Scroll to MAIN->PROFILE#->ADJ-> and make the necessary door open and close adjustments.

Notes: For adjustment parameters,

- See “Door Closing Profile” and “Door Open Profile” on the right side of the label in the door card cover, or,
- See “Door Closing Profile” on page12, and “Door Open Profile” on page 13.

CAUTION **To avoid mechanical damage to the elevator, DO NOT make drastic changes in Open and Close high speeds.**

3. Save any adjustment changes to Flash.
   a. Scroll to MAIN->SYSTEM->CMD->SAVETOFLASH, press ENTER, and UIT displays,
      ENT to save
      ESC to exit

   b. Press ENTER, and the UIT displays,
      Adjs have been saved to FLASH

IMPORTANT! **Save changes to FLASH when the door is on DCL, or the changes may not be accepted.**

Closing Force

1. Use the UIT, scroll to MAIN->DOOR->ADJ->STALL, and note the value so that it can be set back later.
2. Press ENTER, scroll to 0 (zero), and press ENTER again. This sets the value of STALL to 0.
3. Use a force gauge to measure the closing force. See Figure 3.

Notes:

- The closing force should be less than 30 lbf. in the middle 1/3 of travel.
- If the closing force is too high: Scroll to MAIN->DOOR->ADJ->CTL2, reduce the value, re-measure and repeat until the closing force is within limits.

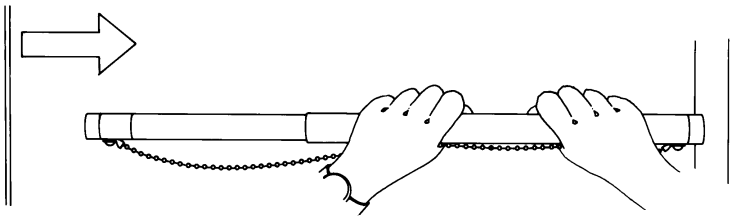

Figure 3 - Safe Use of the Door Gauge

4. Scroll to MAIN->DOOR->ADJ->STALL, and set STALL back to its original value.
5. Save the values to FLASH.
6. Scroll to MAIN->SYSTEM->CMD->SAVETOFLASH, press ENTER, and the UIT displays,

   ENT to save
   ESC to exit
7. Press ENTER, and the UIT displays, Adj's have been saved to FLASH.

Closing Kinetic Energy

1. Place the car at the landing where the test will be performed.
2. Place car on Inspection Operation.
3. Determine the minimum allowable closing time from the door operator nameplate.

Code Distance For the Time Measurement,

- Center Opening Doors: 1" from FULLY OPEN to 1" from FULLY CLOSED.
- Single Speed Doors: 2" from FULLY OPEN to 2" from the face of the strike column.
- For the LD-03 Operator: 2 inches = 4.286 revolutions and 1 inch = 2.143 revolutions.

Note: Each door operator is programmed with the correct stopwatch starting and stopping points (used for measuring closing time with the stopwatch feature).

4. Place the car on Automatic Operation.
5. Scroll to MAIN->DOOR->CMD->STOPWATCH, and press ENTER.
6. Choose the close time, press ENTER, and the UIT displays, POS Mark 1 n.nnn (value from SWM1).
7. Press ENTER, and the UIT displays, POS Mark 2 n.nnn (value from SWM2).
8. Press DOOR OPEN, and when door is FULLY OPEN, press ENTER and the UIT displays, Stopwatch armed.
9. When the door closes, the UIT displays the closing time. If the closing time is less than the minimum allowable closing time specified, reduce the value of the close high speed (CHS#) adjustment and repeat until the closing time is greater than or equal to the minimum.
10. Save any adjustment changes to FLASH.

Door Closing Profile

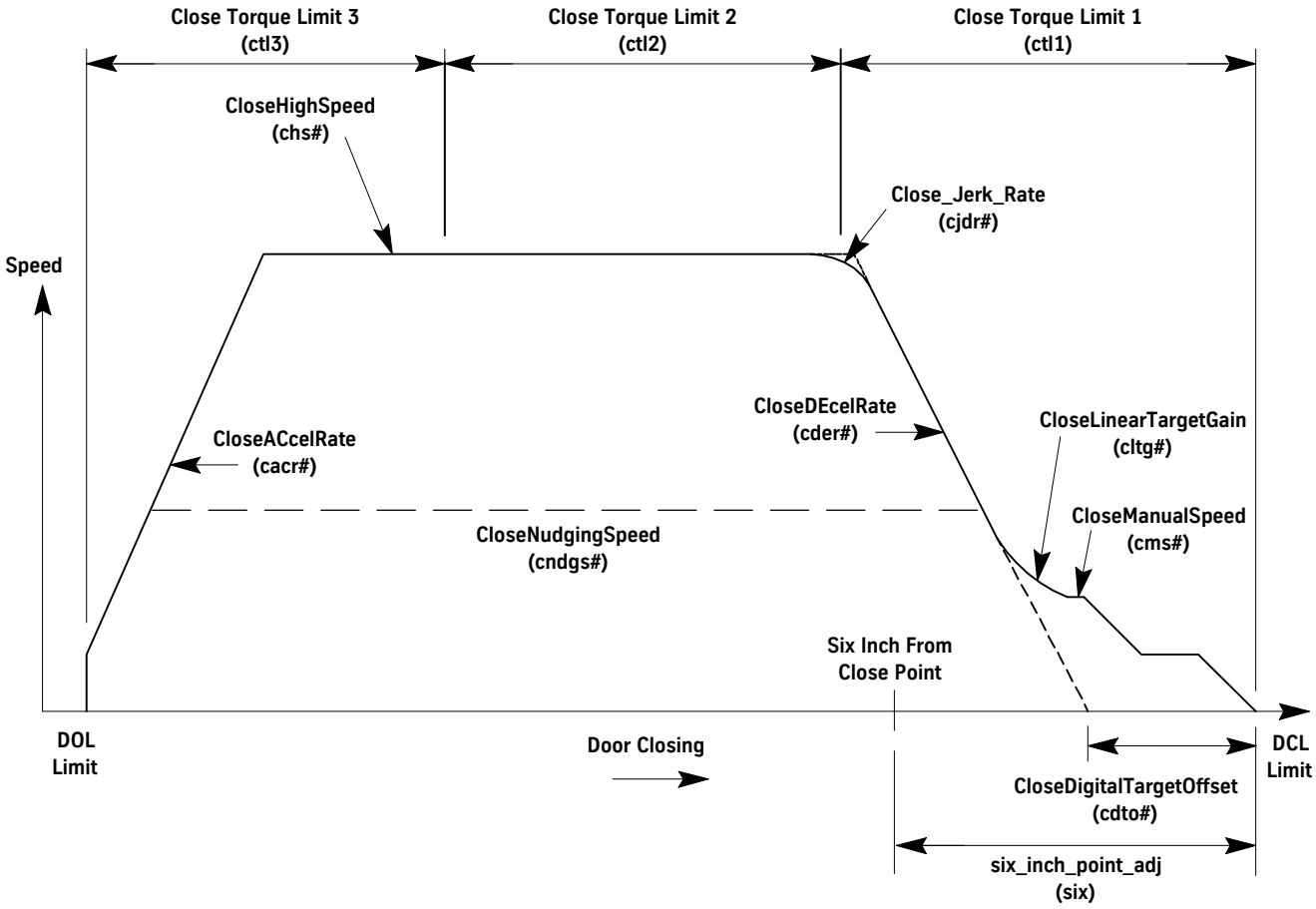

Profile#	Adjustment
cacr#	CloseACcelRate
cbs#	CloseBacklashSpeed
cbt#	CloseBacklashTime
chs#	CloseHighSpeed
cder#	CloseDEcelRate
cms#	CloseManualSpeed
cltg#	CloseLinearTargetGain
cdto#	CloseDigitalTargetOffset
cndgs#	CloseNudgingSpeed

Note: # = Profile Number

Door Adjustment	
ctl1	Close Torque Limit 1
ctl2	Close Torque Limit 2
ctl3	Close Torque Limit 3

Door Opening Profile

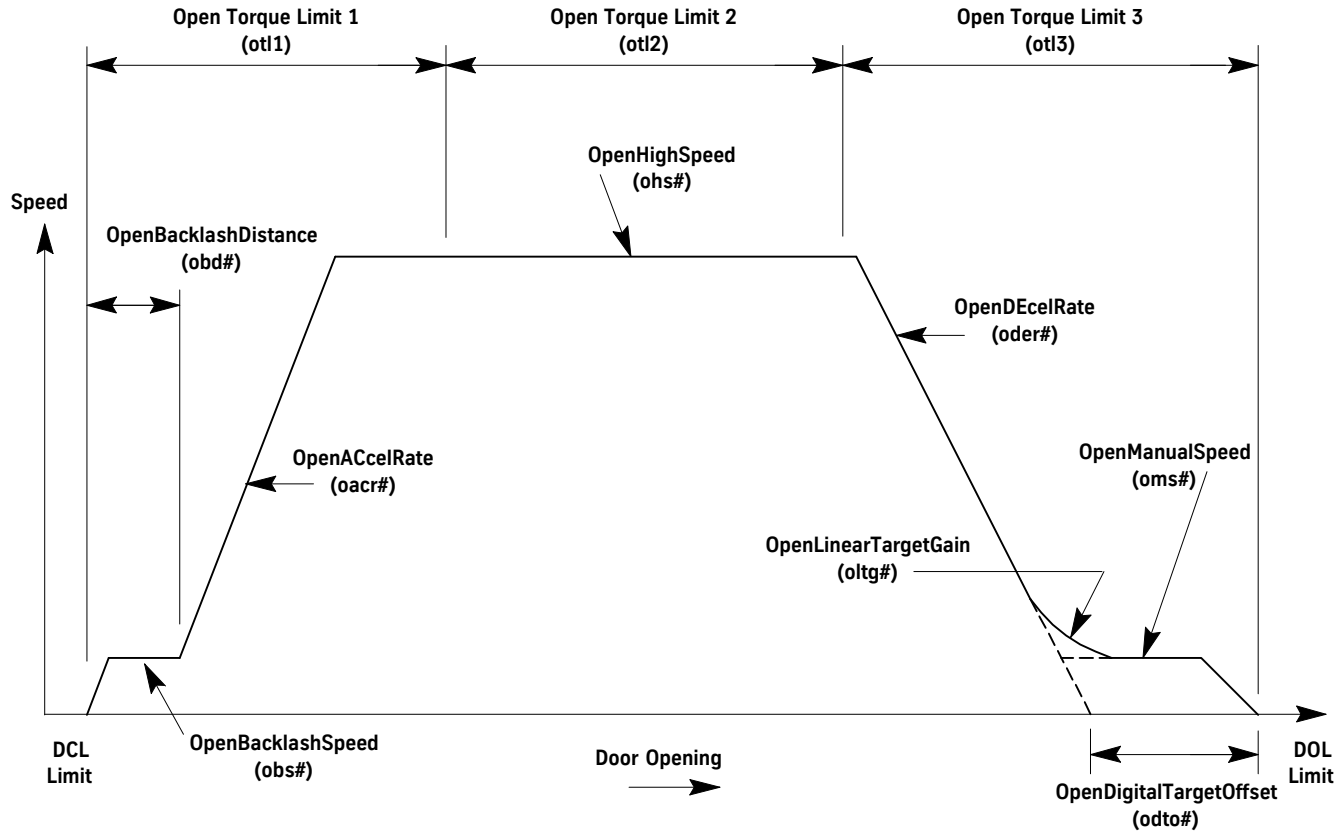

Profile#	Adjustment
oacr#	OpenACcelRate
obs#	OpenBacklashSpeed
obd#	OpenBacklashDistance
ohs#	OpenHighSpeed
oder#	OpenDEcelRate
oms#	OpenManualSpeed
oltg#	OpenLinearTargetGain
odto#	OpenDigitalTargetOffset

Note: # = Profile Number

Door Adjustment	
otl1	Open Torque Limit 1
otl2	Open Torque Limit 2
otl3	Open Torque Limit 3

Diagnostics

The User Interface Tool (UIT)

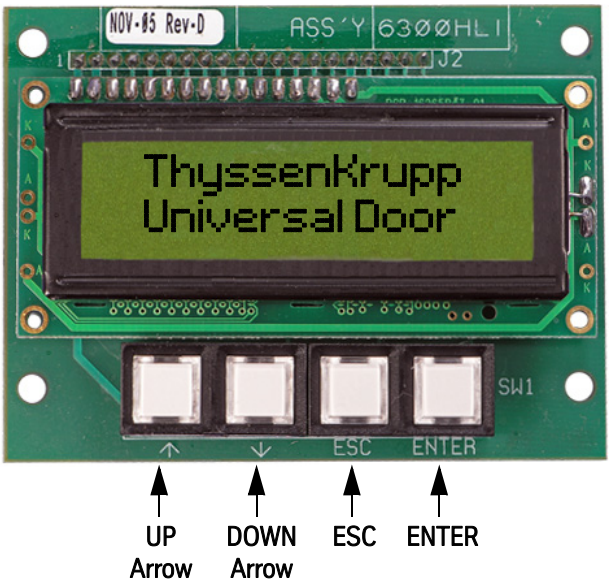

UP or DOWN Arrow - Scrolls through menus, adjustments, and displays.

ESC - Exits the current level of a menu, adjustment, or display.

ENTER - Selects a menu, adjustment, or display.

Overview of Adjustments, Parameters, and Commands

- All adjustments must be made when the doors are idle.
- Before the card is reset or powered down, save any adjustment changes to FLASH.
- When the adjustment is a speed value:

  Increase the value = The door runs at a faster speed.
  Decrease the value = The door runs at a slower speed.
- When the adjustment is an acceleration or deceleration rate value:

  Increase the value = The door accelerates or decelerates faster.
  Decrease the value = The door accelerates or decelerates slower.
- When the adjustment is a distance or point value:

  Increase the value = The distance or point is further from either the door open limit (DOL) or door close limit (DCL), depending on whether the door is opening or closing.

  Decrease the value = The distance or point is closer to either the door open limit (DOL) or door close limit (DCL), depending on whether the door is opening or closing.
- Door position is stored at 0 on DCL and at Travel (TRV) on DOL.
- Speeds are (+) in the opening direction, and (–) in the closing direction.

The UIT Menu Tree

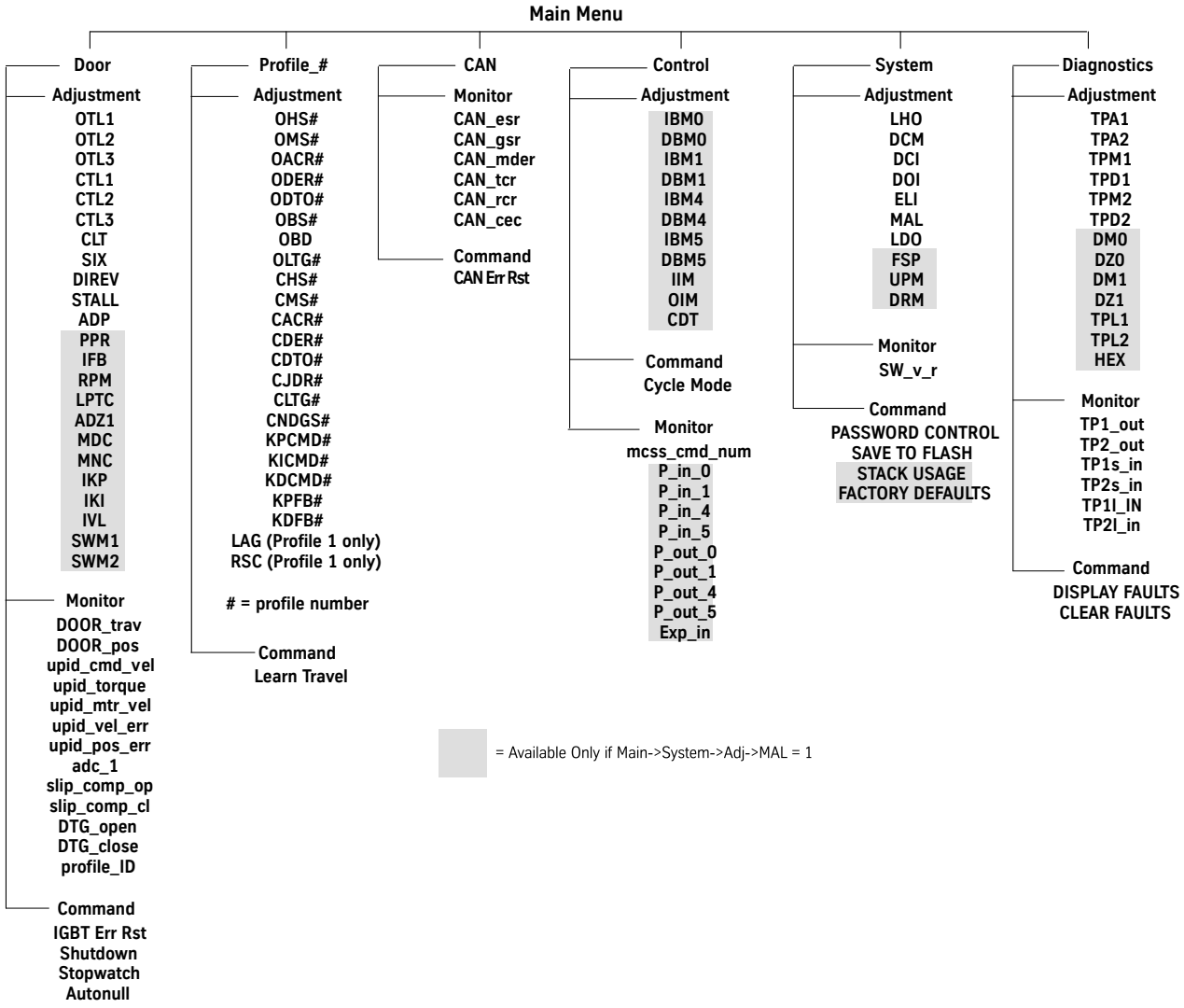

Adjustments

Control Adjustments

Mnemonic	Adjustment		Definition				
CDT	Cycle Delay Time		The time (in seconds) that the door control will delay at each limit when the doors are on continuous cycle mode Min: 0 Default: 32 Max: 255				
DBM0	De-Bounce Bit Mask 0		The signals shown in the table can have additional de-bouncing by setting the corresponding bit. The default indicates that all these signals are de-bounced. Min: 0 Default: 255 Max: 255				
Bit 7	**Bit 6**	**Bit 5**	**Bit 4**	**Bit 3**	**Bit 2**	**Bit 1**	**Bit 0**
X	Input	Input	Input	X	X	X	X
X	Electronic DCL	Encoder Phase B	Encoder Phase A	X	X	X	X
DBM1	De-Bounce Bit Mask 1		The signals shown in the table can have additional de-bouncing by setting the corresponding bit. The default indicates that all these signals are de-bounced. Min: 0 Default: 255 Max: 255				
Bit 7	**Bit 6**	**Bit 5**	**Bit 4**	**Bit 3**	**Bit 2**	**Bit 1**	**Bit 0**
Input	Input	X	X	X	X	X	X
Hall Limit DOL	Hall Limit DCL	X	X	X	X	X	X
DBM4	De-Bounce Bit Mask 4		The signals shown in the table can have additional de-bouncing by setting the corresponding bit. The default indicates that all these signals are de-bounced. Min: 0 Default: 255 Max: 255				
Bit 7	**Bit 6**	**Bit 5**	**Bit 4**	**Bit 3**	**Bit 2**	**Bit 1**	**Bit 0**
X	X	Input	Input	X	X	X	X
X	X	VBUS	SE	X	X	X	X
DBM5	De-Bounce Bit Mask 5		The signals shown in the table can have additional de-bouncing by setting the corresponding bit. The default indicates that all these signals are de-bounced. Min: 0 Default: 255 Max: 255				
Bit 7	**Bit 6**	**Bit 5**	**Bit 4**	**Bit 3**	**Bit 2**	**Bit 1**	**Bit 0**
X	X	Input	Input	Input	Input	Input	Input
X	X	Electronic DOL	X	F/Rn	CAN/485n	MDC	MDO

Control Adjustments (continued)

Mnemonic	Adjustment		Definition				
IBM0	Invert Bit Mask 0		The signals shown in the table can be inverted by setting the corresponding bit. The default indicates that the Encoder Phase B and Encoder Phase A signals are inverted. Min: 0 Default: 32 Max: 255				
Bit 7	**Bit 6**	**Bit 5**	**Bit 4**	**Bit 3**	**Bit 2**	**Bit 1**	**Bit 0**
X	Input	Input	Input	X	X	X	X
X	Electronic DCL	Encoder Phase B	Encoder Phase A	X	X	X	X
IBM1	Invert Bit Mask 1		The signals shown in the table can be inverted by setting the corresponding bit. The default indicates that the Hall Limit DOL and Hall Limit DCL signals are inverted. Min: 0 Default: 192 Max: 255				
Bit 7	**Bit 6**	**Bit 5**	**Bit 4**	**Bit 3**	**Bit 2**	**Bit 1**	**Bit 0**
Input	Input	X	X	X	X	X	X
Hall Limit DOL	Hall Limit DCL	X	X	X	X	X	X
IBM4	Invert Bit Mask 4		The signals shown in the table can be inverted by setting the corresponding bit. The default value indicates that the SE signal should be high when not obstructed. If the value is set to 0, then SE signal should be low when not obstructed. Min: 0 Default: 0				
Bit 7	**Bit 6**	**Bit 5**	**Bit 4**	**Bit 3**	**Bit 2**	**Bit 1**	**Bit 0**
X	X	Input	Input	X	X	X	X
X	X	VBUS	SE	X	X	X	X
IBM5	Invert Bit Mask 5		The signals shown in the table can be inverted by setting the corresponding bit. The default indicates that the Electronic DOL, MDC, and MDO signals are inverted. Min: 0 Default: 35 Max: 255				
Bit 7	**Bit 6**	**Bit 5**	**Bit 4**	**Bit 3**	**Bit 2**	**Bit 1**	**Bit 0**
X	X	Input	X	Input	Input	Input	Input
X	X	Electronic DOL	X	F/Rn	CAN/485n	MDC	MDO

Control Adjustments (continued)

Mnemonic	Adjustment		Definition				
IIM	Input Invert Mask		This is the input invert mask for the I/O Expansion. The signals shown in the table can be inverted by setting the corresponding bit. The default indicates that all of the input signals are inverted. Min: 0 Default: 95 Max: 255				
Bit 7	**Bit 6**	**Bit 5**	**Bit 4**	**Bit 3**	**Bit 2**	**Bit 1**	**Bit 0**
X	Input	Input	Input	Input	Input	Input	Input
X	DCL	DOL	HDI2	HDI1	NDG	CD	OD
OIM	Output Invert Mask		This is the output invert mask for the I/O Expansion. The output signals shown in the table can be inverted by setting the corresponding bit. The default indicates that none of the signals are inverted. Min: 0 Default: 0 Max: 255				
Bit 7	**Bit 6**	**Bit 5**	**Bit 4**	**Bit 3**	**Bit 2**	**Bit 1**	**Bit 0**
X	X	X	X	Output	Output	Output	Output
X	X	X	X	DRL	DL6	DCL	DOL

Diagnostic Adjustments

Notes:

- These values are for diagnostic purposes and cannot be changed using the UIT.
- The test points have a range of 0V minimum to +3V maximum.
- The test point outputs are based on Equation 1 and Equation 2.

  Equation 1= TP1out = ((TP1in * TPM1) / TPD1) * 0.73mV + 1.5V

  Equation 2 = TP2out = ((TP2in * TPM2) / TPD2) * 0.73mV + 1.5V

Diagnostic Adjustments

Adjustment	Minimum	Default	Maximum	Definition
DM0	0	2048	4095	DAC 0 Multiplier - Multiplier for DAC0; 2048 = 1.000. Do not use DM0, use TPM1 instead.
DM1	0	2048	4095	DAC 1 Multiplier - Multiplier for DAC1; 2048 = 1.000. Do not use DM1, use TPM2 instead.
DZ0	-1228	0	1228	DAC 0 Offset - Zero offset for DAC0. Adjust for 1.500V output when input to DAC0 = 0.
DZ1	-1228	0	1228	DAC 1 Offset - Zero offset for DAC1. Adjust for 1.500V output when input to DAC1 = 0.
HEX	–	0	–	Values in Hex - Set to 1 to display numerical values in hexadecimal format. Set to 0 to display numerical values in decimal format.
TPA1	0	2048	32767	Test Point 1 Address - Address for the variable information to be output at Test Point1.

Diagnostic Adjustments (continued)

Adjustment	Minimum	Default	Maximum	Definition
TPA2	0	2048	32767	Test Point 2 Address - Address for the variable information to be output at Test Point 2.
TPD1	0	0	32767	Test Point 1 Divider - Divider for Test Point 1. Used to facilitate viewing signals on Test Point 1. Refer to Equation 1.
TPD2	0	0	32767	Test Point 2 Divider - Divider for Test Point2. Used to facilitate viewing signals on Test Point 2. Refer to Equation 2.
TPL1	–	0	–	Test Point 1 Length - Length of variable for Test Point 1. Set to 0 for short and set to 1 for long.
TPL2	–	0	–	Test Point 2 Length - Length of variable for Test Point 2. Set to 0 for short and set to 1 for long.
TPM1	1	1	32767	Test Point 1 Multiplier - Multiplier for Test Point 1. Used to facilitate viewing signals on Test Point 1. See Equation 1.
TPM2	1	1	32767	Test Point 2 Multiplier - Multiplier for Test Point 2. Used to facilitate viewing signals on Test Point 2. See Equation 2.

Door Adjustments

Adjustment	Minimum	Default	Maximum	Definition
ADP	1	1	DPL Adj	Active Door Profile - Use to manually select the door profile.
ADZ0*	-8192	0	8192	A/D Digital Zero0 - The digital zero value for the analog to digital input number 0. This is on the W phase.
ADZ1*	-8192	0	8192	A/D Digital Zero1 - The digital zero value for the analog to digital input number 1. This is on the U phase.
CLT	0	10	25	Closing Torque (%) - This adjustment sets the closing torque limit. This adjustment is a percent of Maximum Drive Current.
CTL1	0	20	100	Close Torque Limit 1 (%) - An adjustment value that represents the maximum allowable door motor current during the last third of close cycle.
CTL2	0	20	100	Close Torque Limit 2 (%) - An adjustment value that represents the maximum allowable door motor current during the middle third of close cycle.
CTL3	0	40	100	Close Torque Limit 3 (%) - An adjustment value that represents the maximum allowable door motor current during the first third of close cycle.
DIREV	0	100	500	Smooth Turnaround (RPM) - This is the speed of the motor that must be reached before reversing the door motor to re-open the doors after a safety edge has been activated.
IFB*	0	0	1	Invert Feedback - Do Not Change.
IKI*	0	807	6400	Current Loop Integral Gain - Do Not Change.
IKP*	0	1.25	8.0	Current Loop Proportional Gain - Do Not Change.
IVL*	10	95	100	Current Loop Voltage Limit - Do Not Change.
LPTC*	0	.015	.050	Low Pass Time Constant - This value is used as the time constant for the low pass filter. This adjustment is in milliseconds.

Door Adjustments (continued)

Adjustment	Minimum	Default	Maximum	Definition
MDC*	MNC	6.79	6.8	Maximum Drive Current - The maximum drive current in Amps rms. Do Not Change.
MFC*	0	1.0	MNC	Motor Field Current - Motor field current in Amps rms. Do Not Change.
MNC*	MFC	1.4	MDC	Motor Nameplate Current - Motor nameplate current in Amps rms. Do Not Change.
MTP*	2.0	6.0	8.0	Motor Poles - The number of poles of the AC door motor. Do Not Change.
OTL1	0	50	100	Open Torque Limit 1 (%) - An adjustment value that represents the maximum allowable door motor current during the first third of open cycle. This is a percentage of the maximum drive current.
OTL2	0	45	100	Open Torque Limit 2 (%) - An adjustment value that represents the maximum allowable door motor current during the during the middle third of open cycle.
OTL3	0	20	100	Open Torque Limit 3 (%) - An adjustment value that represents the maximum allowable door motor current during the last third of open cycle.
PPR*	64	500	2048	Encoder Resolution - This is the pulses per revolution of the door operator motor encoder.
RPM*	500	1150	2048	Motor RPM - This is the nameplate door operator motor RPM.
RSF*	.10	3.1	6.0	Rated Slip Frequency - The rated slip frequency of the AC motor in Hertz. Do Not Change.
SIX	0	1.0	15.9	Six Inch Point (rev)- This is the point at which the six inch from close signal will be sent to the controller. This adjustment is in tenths of motor revolutions. Note: To determine the relationship of travel distance to motor RPM, see Door Parameter POS.
STALL	0	50	300	Stall Velocity - This sets the motor RPM that is used to determine when the door motor is stalled and the reduced stall torque adjustment value is applied to the door motor. This adjustment is in RPM.
SWM1	0	0	32.767	Stop Watch Mark 1 (Rev) - Used in conjunction with the Stopwatch feature. SWM1 is Mark 1.
SWM2				Stop Watch Mark 2 (Rev) - Used in conjunction with the Stopwatch feature. SWM2 is Mark 2.
*System Adjustment MAL must equal 1 for the availability of the adjustment.				

Profile Adjustments

Notes:

- # = Profile Number
- Several different door operation profiles are available.
- Each profile has adjustments for both Open and Close; The profile adjustments have the same minimum, default, and maximum values.
- Each value may be adjusted for a different purpose.
- Adjustment values can relate to one another only within the same door operation profile.

Profile Adjustments

Adjustment	Minimum	Default	Maximum	Definition
CACR#	0	1200	3600	Close Acceleration Rate (RPM/sec) - Close acceleration rate of door motor in rpm/sec. This is the rate the motor speed changes when transitioning from zero speed and the door open limit to top speed.
CDER#	0	900	1919	Close Deceleration Rate (RPM/sec) - Close deceleration rate of door motor in rpm/sec. This is the rate the motor speed changes when transitioning from top speed to manual close speed.
CDTO#	-2.0	0	2.0	Close Digital Target Offset (Rev) - This adjustment shifts the deceleration portion of the opening cycle away from the door close limit. Increasing this value will cause the doors to begin deceleration further from the close limit.
CHS#	Close manual speed adjust-ment value.	300	Rated RPM of motor in RPM adjustment.	Close High Speed (RPM) - Maximum close speed of the door motor in rpm. This is the speed of the motor that the control system will attain during a close door cycle.
CJDR#	0	3100	8192	Close Jerk Rate (RPM/sec^2) - This is the jerk rate in the close direction when transitioning from top close speed to decel-eration. This controls the amount of rounding/ smoothing that occurs during the transition. Units are RPM/sec/sec.
CLTG#	60	120	3000	Close Linear Target Gain - 1/min
CMS#	0	40	Close high speed adjustment value.	Close Manual Speed (RPM) - Manual close speed of door motor in rpm. This is the speed of the motor when the doors are closed with the manual push buttons or during the last portion of a close cycle.
CNDGS#	0	125	Close high speed adjustment	Nudge Close Speed (RPM) - This is the speed of the door motor when nudging operation is activated.
KDCMD#	0	0	327.67	Speed Control Derivative Gain - Do Not Change.
KDFB#	0	0	327.67	Speed Feedback Derivative Gain - Do Not Change.
KICMD#	0	22.2	3276.7	Speed Control Integral Gain - Do Not Change.
KPCMD#	0	0	327.67	Speed Command Proportional Gain - Do Not Change.
KPFB#	0	3.33	327.67	Speed Feedback Proportional Gain - Do Not Change.
LAG	0	0.150	0.250	Profile Lag Compensation (sec) - Adjusts the compensation in the profile that accounts for the delay between the demand and the motor response. Units are in seconds. Available only in Profile1. Do Not Change.

Profile Adjustments (continued)

Adjustment	Minimum	Default	Maximum	Definition
OACR#	0	1200	3600	Open Acceleration Rate (RPM/sec) - Open acceleration rate of door motor in rpm/sec. This is the rate the motor speed changes when transitioning from backlash speed to top speed.
OBD	0	1.0	10	Open Backlash Distance (Rev) - Sets the distance that the doors will move at open backlash speed (OBS#) at the beginning of an open cycle. The backlash distance begins just after the doors leave the door close limit and is in motor revolutions. This distance is used to allow the hoistway door to be picked up by the car door interlock rollers, and is effective in the opening cycle only. Note: To determine the relationship of travel distance to motor RPM, see Door Parameter POS.
OBS#	0	60	Open high speed adjustment value.	Open Backlash Speed (RPM) - This is the speed of the door motor in rpm during the open backlash distance (OBD#). This speed is used to keep the door speed low until the car door interlock rollers pick up the hoistway door.
ODER#	0	1200	3839	Open Deceleration Rate (RPM/sec) - Open deceleration rate of door motor in rpm/sec. This is the rate the motor speed changes when transitioning from top speed to manual open speed.
ODTO#	-2.0	0	2.0	Open Digital Target Offset (Rev)- This adjustment shifts the deceleration portion of the opening cycle away from the door open limit. Increasing this value will cause the doors to begin deceleration further from the open limit.
OHS#	Open manual speed adjustment value.	400	Rated RPM of motor in RPM adjustment.	Open High Speed (RPM) - Maximum open speed of the door motor in rpm. This is the speed of the motor that the control system will attain during an open door cycle.
OLTG#	60	150	3000	Open Linear Target Gain (Rev) - 1/min.
OMS#	0	40	Open high speed adjustment value.	Open Manual Speed (RPM) - Manual open speed of door motor in rpm. This is the speed of the motor when the doors are opened with the manual push buttons or during the last portion of an open cycle.
RSC	0	0	2000	Re-open Slip Compensation - This is the slip compensation factor used during a re-open. Available only in Profile 1. Do Not Change.

System Adjustments

These adjustments will not take effect until the new value is saved to FLASH and the door operator card is reset.

System Adjustments

Adjustment	Minimum	Default	Maximum	Definition
DCI	–	0	–	Discrete Controller Interface - • Set to 1 for relay controller or discrete signal interface (modernization jobs). • Set to 0 for serial controller interface; DCL and DOL can be selected to input through hall effect or through the I/O Expansion card. See Electronic Limit Interface (System Adjustment ELI).
DCM	–	1	–	DC Motor Control Selection - Set to 1 to select DC motor control, 0 to select AC motor control.
DOI	–	0	–	Discrete Operator Interface - Set to 1 to allow door operator card to accept signals from the expansion interface card. Set to 0, and the door operator card does not accept signals from the expansion interface card.
DPL	1	5	5	Door Profile Limit - Number of active profiles.
DRM	1	4	50	Multiple for Slow Clock - Do Not Change.
ELI	–	0	–	Electronic Limit Interface - • Set to 1 for DCL and DOL signal inputs from header hall effect sensors. • Set to 1 to use UDC card with Linear Door Operator. • If set to 0 and discrete controller interface (System Adjustment DCI) is set to 1, then DCL and DOL are input through the hall effect sensors on the UDC card (harmonic operator). • If set to 1 and DCI is set to 1, then DCL and DOL are input through the I/O Expansion Card.
FSP	250	1000	2500	Sample Frequency - Do Not Change.
LDO	–	0	–	Linear Door Operator - Set to 1 to select the linear door operator application, 0 for harmonic application. Must Cycle Power.
LHO	–	1	–	Left Hand Operation - Set to 1 for left hand operation, 0 for right hand operation. Must Cycle Power.
MAL	–	0	–	Menu Access Level - Set to 1 for full menu access, 0 for restricted or limited menu access.
UPM	1	2	50	Multiple for Medium Clock - Do Not Change.

Parameters

CAN Parameters

These values are viewable only to aid in factory-level diagnostics. Not for field use.

Mnemonic	Command	Definition
CEC	Transmit and Receive Error Counters	Displays the value of the transmit and receive error counters.
ESR	Error Status Register	Displays the value of the error status register.
GSR	Global Status Register	Displays the value of the global status register.
MDER	Mailbox Direction/ Enable Register	Displays the value of the mailbox direction/enable register.
RCR	Receive Control Register	Displays short test point 1 input variable.
TCR	Transmission Control Register	Displays the value of the transmission control register.

Control Parameters

These values are viewable only to aid in diagnostic purposes.
MCS = Motion Control State Number - Indicates the current motion control state shown below.

Motion Control State Number	Description
4	Direction Reversal
8	Stop Door
9	Hold Closed
10	Nudge Close
11	Manual Open
12	Manual Close
13	Open Door
14	Close Door

Control Parameters
(continued)

For the availability of the following parameters, System Adjustment MAL must equal 1.

Mnemonic	Command		Definition				
PIN0	Input Parameter 0		Use to view the status of the parameters shown in the table.				
Bit 7	Bit 6	Bit 5	Bit 4	Bit 3	Bit 2	Bit 1	Bit 0
X	Electronic	Encoder Phase	Encoder Phase	X	X	X	X
PIN1	Input Parameter 1		Use to view the status of the parameters shown in the table.				
Bit 7	Bit 6	Bit 5	Bit 4	Bit 3	Bit 2	Bit 1	Bit 0
Hall Limit	Hall Limit	X	X	X	X	X	X
PIN4	Input Parameter 4		Use to view the status of the parameters shown in the table.				
Bit 7	Bit 6	Bit 5	Bit 4	Bit 3	Bit 2	Bit 1	Bit 0
LCD Back	X	VBUS	SE	X	X	X	X
PIN5	Input Parameter 5		Use to view the status of the parameters shown in the table.				
Bit 7	Bit 6	Bit 5	Bit 4	Bit 3	Bit 2	Bit 1	Bit 0
X	FTP	Electronic DOL	VF/PWMn	F/Rn	CAN/485n	MDC	MDO
POUT0	Output Parameter 0		Use to view the status of the parameters shown in the table.				
Bit 7	Bit 6	Bit 5	Bit 4	Bit 3	Bit 2	Bit 1	Bit 0
X	X	X	X	X	X	X	X
POUT1	Output Parameter 1		Use to view the status of the parameters shown in the table.				
Bit 7	Bit 6	Bit 5	Bit 4	Bit 3	Bit 2	Bit 1	Bit 0
X	X	X	X	X	X	X	X
POUT4	Output Parameter 4		Use to view the status of the parameters shown in the table.				
Bit 7	Bit 6	Bit 5	Bit 4	Bit 3	Bit 2	Bit 1	Bit 0
LCD Back	X	X	X	X	X	X	X
POUT5	Output Parameter 5		Use to view the status of the parameters shown in the table.				
Bit 7	Bit 6	Bit 5	Bit 4	Bit 3	Bit 2	Bit 1	Bit 0
X	FTP	X	VF/PWMn	X	X	X	X

Diagnostic Parameters

These values are viewable only to aid in diagnostic purposes.

Mnemonic	Command	Definition
TPL1	Test Point 1 Long In	Displays long test point 1 input variable.
TPL2	Test Point 2 Long In	Displays long test point 2 input variable.
TPO1	Test Point 1 Out	Displays test point 1 voltage out (above and below 1.5V nominal).
TPO2	Test Point 2 Out	Displays test point 2 voltage out (above and below 1.5V nominal).
TPS1	Test Point 1 Short In	Displays short test point 1 input variable.
TPS2	Test Point 2 Short In	Displays short test point 2 input variable.

Door Parameters

These values are viewable only to aid in diagnostic purposes.

Mnemonic	Command	Definition
ADC0	Analog to Digital Converter 0	Displays the value of analog to digital converter number 0, which is the lwfbk signal (W phase current feedback).
ADC1	Analog to Digital Converter 1	Displays the value of analog to digital converter number 1, which is the lufbk signal (U phase current feedback).
CSC	Close Slip Compensation	This value is automatically set. It indicates the amount of belt slip during a close door cycle. This value is in motor revolutions. Do Not Change.
DPID	Profile ID	Displays current profile.
DTGC	Distance To Go Close	Calculated value based on travel and close slip compensation.
DTGO	Distance To Go Open	Calculated value based on travel and open slip compensation.
OSC	Open Slip Compensation	This value is automatically set. It indicates the amount of belt slip during an open door cycle. This value is in motor revolutions. Do Not Change.
POS	Door Position	This parameter displays the position of the door in motor revolutions from the door close limit (DCL). To use this feature, move the doors to the desired position and read the number displayed. Used for setting OBD and SIX. Minimum = 0 Default = 0 Maximum = TRV
TRV	Door Travel	This is the travel value learned when a door scan is performed. The value is in motor revolutions
UCV	UPID Command Velocity	Displays the dictated or commanded velocity.
UMV	UPID Motor Velocity	Displays the dictated or commanded motor velocity.
UPE	UPID Position Error	Displays the difference between calculated position and actual position.
UTQ	UPID Torque	Displays the dictated or commanded torque.
UVE	UPID Velocity Error	Displays the difference between dictated or commanded velocity and actual velocity.

System Parameters

This value is viewable only to aid in diagnostic purposes.

Mnemonic	Command	Definition
VER	Software Version/Revision	Displays the version/revision of door operator software.

Fault Codes

Notes:

- IMS 2.2 or greater is required to adjust the LD-03 Door Operator.
- IMS 2.2.0.3 or greater is required to upload door profiles.
- A UDC Door FAST IMS application is available. This application allows communication with the door operator at the door operator car top box using the orange cable and the 485 communication link.
- 2000 Series Fault Code = Front Door Operator
  3000 Series Fault Code = Rear Door Operator

Fault Codes

Fault Code	Description / Causes / Solutions
2036 / 3036	IGBT FAULT - A defective IGBT. **Possible Causes** • This can be caused by an over current condition. **Possible Solutions** • Try to restart the power module. See *Restart IGBT Power Module*. • If the fault can not be cleared, verify that the doors are free of binds. If the doors bind, correct the cause of the bind and restart the power module. See *Restart IGBT Power Module*. • Check for wiring shorts. • If the fault remains, replace the door card or motor, or check for shorts.
2050 / 3050	ENCODER FAULT - An invalid encoder count. **Possible Causes** • This can be caused by an over current condition. **Possible Solutions** 1. Verify that the encoder wiring is correct (e.g. phase A and phase B are not swapped). 2. Verify that encoder is working properly. See Checking Encoder. 3. Make sure the magnetic limits are fastened securely on the cam shaft. **CAUTION** **Do not overtighten, the cams are plastic and can be damaged rather easily.** 4. Verify that all of the belts are in good shape and replace (if necessary). 5. Check the belt tension. **Note:** Tighten the belt (if necessary). Do not overtighten the drive belt because it can cause premature motor bearing failure. 6. Verify that the DCL and DOL limits activate at the proper time. If necessary, readjust the limits and perform a new door scan. 7. If the fault remains, replace the door card.

Fault Codes (continued)

Fault Code	Description / Causes / Solutions
2051 / 3051	XS BELT SLIP FLT - Excessive Belt Slip. **Possible Solutions** 1. Make sure the magnetic limits are fastened securely on the cam shaft. **CAUTION** Do not overtighten, the cams are plastic and can be damaged rather easily. 2. Verify that all of the belts are in good shape and replace (if necessary). 3. Check the belt tension. **Note:** Tighten the belt (if necessary). Do not overtighten the drive belt because it can cause premature motor bearing failure. 4. Verify that the DCL and DOL limits activate at the proper time. If necessary, readjust the limits and perform a new door scan. 5. If the fault remains, replace the door card.
2053 / 3053	MOTOR WIRE WRONG - The door timed out, more than 14 seconds, while trying to power off a limit during scan. **Possible Solutions** 1. Verify that the motor is wired properly. 2. Verify that Left Hand Operation (LHO) is set correctly. 3. Perform a new door scan. 4. If the fault remains, replace the door card.
2054 / 3054	REV ENCODER FLT **Possible Solutions** 1. Verify that the encoder wiring is correct (e.g., phase A and phase B are not swapped). 2. Verify that the encoder is working properly. 3. Perform a new door scan. 4. If the fault remains, replace the door car.
2055 / 3055	TRAVEL FAULT - An invalid door travel value. **Possible Solutions** 1. Verify that the motor is wired properly. 2. Verify that the system adjustments are set correctly. 3. Perform a new door scan. 4. Verify that the encoder wiring is correct (e.g. phase A and phase B are not swapped). 5. Verify that encoder is working properly. 6. Verify that the DCL and DOL limits activate at the proper time. If necessary, readjust the limits and perform a new door scan. 7. If the fault remains, replace the door card.
2056 / 3056	OPEN OS FAULT - Door overspeed in open direction with Open Command. **Possible Solutions** • Verify that the RPM adjustment is set correctly.
2057 / 3057	CLOSE OS FAULT - Door overspeed in close direction with Close Command. **Possible Solutions** • Verify that the RPM adjustment is set correctly.
2058 / 3058	CL RUNAWAY FAULT - Door over speed in close direction with no Close Command.

Fault Codes (continued)

Fault Code	Description / Causes / Solutions
2059 / 3059	BUS POWER FAULT - Loss of BUS supply. **Possible Solutions** • Check fuse F2 on the door card and replace (if necessary). • Verify the wires for power (wires going to CON11) are securely fastened and in the correct place. • If the fault remains, replace the door card.
2060 / 3060	OP RUNAWAY FAULT - Doors overspeed in open direction with no Open Command.
2061 / 3061	OP OV DRIVE FAULT - Doors overdriven in open direction with Open Command.
2062 / 3062	CL OV DRIVE FAULT - Doors overdriven in close direction with Close Command.
2063 / 3063	IFBK FAULT - Failure to regulate the DC current (only) on DCL. **Possible Causes** • An open motor armature circuit. • A defective board, replace the board.
2064 / 3064	I SERIAL COM FAULT - Failure to receive data from the controller within 5 seconds. **Possible Solutions** • Check for a defective door board. • Check for a defective controller board. • Check the wiring.
2065 / 3065	I SCALE FAULT - Current adjustments are out of range. **Possible Solutions** 1. Correct the Maximum Drive Current (MDC) and/or the Motor Nameplate Current (MNC). 2. After making corrections, save and reset the board.
2066 / 3066	DOL DCL FAULT - Both DOL and DCL are on at the same time. **Possible Solutions** 1. Adjust the cam and/or magnet. 2. Replace the switch. 3. Replace the board.
2067 / 3067	DOL FAILURE - The Door Open Limit (DOL) sensor failed to operate after 60 seconds. **Possible Solutions** • Adjust the cam and/or magnet. • Perform a door scan. • Replace the reed switch. • Replace the board.
2068 / 3068	DCL FAILURE - The Door Close Limit (DCL) sensor failed to operate after 60 seconds. **Possible Solutions** • Adjust the cam and/or magnet. • Perform a door scan. • Replace the reed switch. • Replace the board.
2069 / 3069	MAX TORQUE FAULT - One or more torque limit adjustments are greater than the maximum allowed torque. **Possible Solutions** 1. Adjust the Open Torque Limit (OTL#) and/or the Close Torque Limit (CTL#). 2. Correct the Maximum Drive Current (MDC) and/or the Motor Nameplate Current (MNC). 3. After making corrections, save and reset the board.

Technical Information

Record Flight Time

This procedure requires two people - one in the car, and one on top of the car.

1. Place the car at the landing where the test will be performed.
2. Place car on Inspection Operation.
3. Change the value of door adjustment SWM1 to 0 (zero).
4. Record the value of door parameter TRV.
5. Use MDC or MDO to move the doors to 3/4 FULLY OPEN position.
6. Record the value of door parameter POS.
7. Subtract the POS value from the TRV value, and enter this value in door adjustment SWM2.
8. Place the car on Automatic Operation. The doors will close.
9. Select the stopwatch flight (SWF) command from the command pull-down menu.
10. Press and hold Door Open (located in the car) to open the doors.
11. Enter a car call for the next landing - Up or Down.
12. Release Door Open. The doors will close, and the car will run to the selected car call. When the car makes its run and the doors open, the flight time is displayed.

Note: SWM1 and SWM2 values are retained, without saving, until the door operator power is cycled or the door card is reset.

Upload FLASH Program Software

Upload Generic Software

If the "CHECKSUM FAILURE" Fault has been displayed, the generic software has been corrupted and must be reloaded. In addition, the door operator profile must be reloaded.

CAUTION

Before uploading a new door profile, Turn OFF, Lock, and Tag out the mainline disconnect. Disconnect the motor leads. If the door profile is loaded with the motor connected, damage to the board or motor may result.

1. Upload the latest generic software. Contact Field Engineering to obtain the latest software.

Note: If the door card has been replaced, the latest generic software is already uploaded.

2. Upload the appropriate door operator profile (available in IMS).
3. Turn OFF, Lock, and Tag out the mainline disconnect.
4. Remove CON10 from the UDC card to disconnect the door motor leads.
5. Install a UIT (User Interface Tool) on CON2.
6. Use a serial cable with a 4-pin connector adapter to connect a laptop with the HyperTerminal software to the UDC card at CON6.

Upload Generic Software
(continued)

7. Click Start.
8. Select Programs -> Accessories -> HyperTerminal. The Connection Description window opens.
9. Type in a name, such as "FLASH COMM", select an Icon, and then click OK. The Connect To window opens.
10. Select the arrow beside Connect Using:, then select COM1 (or the port that will be used) from the list and click OK. The COM1 Properties window opens.
11. Type in the following properties:
    - Bits per second: 38400
    - Data bits: 8
    - Parity: None
    - Stop bits: 1
    - Flow Control: Hardware
12. Click OK. This session will be activated.
13. Select File -> Save.
14. Select File -> Properties. The Properties dialog box opens.
15. Select Settings. Verify the following:
    - The function, arrow, and ctrl keys act as terminal keys
    - The backspace key sends: Ctrl+H
    - Emulation: Auto detect
    - Telnet terminal ID: ANSI
    - Back scroll buffer lines: 500
16. Click ASCII Setup, and verify the following:
    - Line delay: 0 milliseconds
    - Character delay: 0 milliseconds
    - Wrap lines that exceed terminal width is the only item checked
17. Click OK on both dialog boxes.
18. Select the Transfer pull-down menu, then select Send File.
19. Use the Browse Command to find the correct file, click the filename, and then click Open.
20. Install jumper JP3.
21. Turn ON the mainline disconnect.

Note: The HyperTerminal displays the status message "ZMODEM READY." If this message is not shown, replace the door card.

Upload Generic Software

(continued)

22. To start the software upload, click Send in the HyperTerminal screen.

23. When the upload is complete, the UIT displays,

    ThyssenKrupp
    Universal Door

21. Remove jumper JP3, press Reset, and the UIT displays,

    ThyssenKrupp
    Universal Door

22. Turn OFF, Lock, and Tag out the mainline disconnect.

23. Remove the cable from CON6.

24. Reconnect CON10.

Upload the Door Operator Profile

Obtain the Correct Door Operator Profile from TKE Manufacturing

1. Turn OFF, Lock, and Tag out the mainline disconnect.

2. Remove CON10 from the UDC card to disconnect door motor leads.

3. Use a serial cable with a 4-pin connector adapter to connect a laptop with the HyperTerminal software to the UDC card at CON6.

4. Turn ON the mainline disconnect, and the HyperTerminal window displays,

   ZMODEM READY
   Version 1.04

   a. If this message is not shown, check the following,

      - The JP3 jumper is installed properly.
      - The cables are installed properly.
      - The HyperTerminal settings are correct.

   b. If these check out, replace the door card.

Note: If more than one minute goes by after turning ON the mainline disconnect before the transfer starts, the door card and the HyperTerminal window displays,

ZMODEM FAILED
No Files Recvd

c. If this occurs, press the reset button on the door card, and the HyperTerminal displays,

ZMODEM READY
Version 1.04

Upload the Door Operator Profile

(continued)

d. If this message is not shown, check the following,

- The JP3 jumper is installed properly.
- The cables are installed properly.
- The HyperTerminal settings are correct.

e. If these check out, replace the door card.

CAUTION **Improper DCM setting can cause damage to the door card and/or motor.**

5. Verify the proper DCM setting: Scroll to MAIN->SYSTEM->ADJ->DCM (1 = DC Motor and 0 = AC Motor).
6. Turn OFF, Lock, and TAG out the mainline disconnect.
7. Remove the cable from CON6.
8. Re-connect CON10.
9. Turn ON the mainline disconnect.
10. Verify proper door operation.

Determine the Software Version/Revision

1. Begin with the doors FULLY CLOSED.
2. Scroll to MAIN->SYSTEM->MON->SW_v_r and press ENTER.

Note: The UIT will display the software version and revision. The first two digits are the version, and the second two digits are the revision.

2. Press ESC until the main menu displays.

Cycle Mode

The Cycle Command (CYC), when activated, will cause the doors to continuously cycle. The delay at the DOL and the DCL is controlled by the Cycle Delay Time (CDT) Adjustment.

Activate the Cycle Command

1. Scroll to MAIN->CONTROL->CMD->Cycle Mode, press ENTER, and the UIT displays,

   ENT to ENABLE
   CYCLE Mode

2. Press ENTER, and the UIT displays,

   Control/Cmd
   Cycle Mode

Note: The doors will start cycling.

Deactivate the Cycle Command

1. Scroll to MAIN->CONTROL->CMD->Cycle Mode, press ENTER, and the UIT displays,

   ENT to ENABLE
   CYCLE Mode

2. Press ENTER, and the UIT displays,

   Control/Cmd
   Cycle Mode

Note: The doors will stop cycling.

Restart the IGBT Power Module

The power module may be reset if an overcurrent circuit condition has caused the power module to send a shutdown signal to the DSP. The power module can only be reset after the fault condition has been cleared.

1. Scroll to MAIN->DOOR->CMD->IGBT ERR Rst, press ENTER, and the UIT displays,

   ENT to Proceed
   ESC to Exit

2. To reset the power module, press ENTER, and the UIT displays,

   PWM Reenabled

Note: The power module has now been reset.

3. Press ESC until the main menu displays.

Shut Down the IGBT Power Module

This command prevents any motor operation including the Manual Door Open (MDO) and Manual Door Close (MDO) functions.

1. Scroll to MAIN->DOOR->CMD->Shutdown, and press ENTER.

Note: The UIT display will not change, and the power module has now been shutdown.

2. Press ESC until the main menu displays.

Restore Factory Defaults

Each LD-03 Door Operator is shipped with certain parameters and adjustments modified to match the job condition. The defaults, however, remain the same for all units.

The supplied configuration of the door operator uses adjustment and parameter values that are different from the default values shown in the Diagnostics Section. Using the Factory Defaults Command (FDF) could result in a maladjusted or non-functioning door operator.

1. Begin with the doors FULLY CLOSED.

2. Scroll to MAIN->SYSTEM->CMD->FACTORY DEFAULTS, press ENTER, and the UIT displays,

   ENT to Restore
   ESC to Exit

3. Press ENTER, and the UIT displays,

   Values Restored

Note: All adjustments, parameters and commands are now set to the factory defaults.

4. Press ESC until the main menu displays.

Troubleshooting

Power Up Verification

1. Turn OFF, Lock, and Tag out the mainline disconnect.
2. Unplug the connectors from the door card.
3. Turn ON the mainline disconnect.
4. Measure AC voltage on the door operator terminal strip across AC1S and AC2. The voltages should match the voltages in Table 1 (below). If the voltage measured is zero (0), verify the following:
   - The power switch in the door control box is ON.
   - The AC1S switch is ON in the swing return.
   - The connections in the swing return are good.
   - The power is ON at the elevator controller.
   - The fuses in the elevator controller are good.
   - The connections in elevator controller are good.
5. Measure the AC voltage across AC1S and ACG.
   a. If the voltage is in range of 0 and 80 VAC, measure AC2 to ACG.
   b. If AC2 to ACG is in range of 103 and 126 VAC, AC1S and AC2 have been reversed; Reverse AC1S and AC2.
6. With the system still powered up, measure the DC voltages on the door operator terminal strip across P24 and G24. The voltages should match the voltages in Table 1. If the voltage measured is zero (0), verify the following:
   - The P24 switch in the swing return is ON.
   - The connections in the swing return are good.
   - The power is ON at the elevator controller.
   - The fuses in the elevator controller are good.
   - The connections in the elevator controller are good.

Voltage	Meter Setting	Positive Meter Probe	Negative Meter Probe	Voltage Measured
AC1S	Volts AC	AC1S terminal 6	AC2 terminal 5	120 VAC
AC1S	Volts AC	AC1S terminal 6	ACG terminal 4	120 VAC
AC2	Volts AC	AC2 terminal 5	ACG terminal 4	0 VAC
P24	Volts DC	P24 terminal 17	G24 terminal 20	24 VDC

Table 1 - Voltage Settings

LED Verification

1. Turn OFF, Lock, and Tag out the mainline disconnect. Reconnect the connectors on the door card (located inside the door operator).
2. Make sure the doors are in the FULLY CLOSED position.
3. Turn ON the mainline disconnect.
4. Verify that the VBUS and WD LEDs are ON. See Figure 4 on page 37.

Note: If the VBUS or the WD LED does not come ON, see "Troubleshooting Guide" on page 39.

5. Verify that the doors are still in the FULLY CLOSED position, and that the DCL LED is ON.
6. Turn OFF the toggle switch (located in the door operator).
7. Manually move the doors to the FULLY OPEN position.
8. Turn ON the toggle switch.
9. With the doors in the FULLY OPEN position, verify that the DOL LED is ON.

Power Supplies Check

1. Turn the UDC card ON and measure the voltages (from the table, Figure 4 on page 37) at the specified points on the door card. The voltage for each measurement should be in the range noted.

When checking door card power supplies, take great care to avoid electrical shock and/or damage to the door card.

The power supply for the door motor is named V-Buss. The voltage for this power rail is generated from the incoming 115 VAC, and the 115 VAC is rectified and filtered to produce the DC power supply. A VBUS LED is on the card.

2. The VBUS LED will indicate whether this power supply is good,
   - If the VBUS LED is not ON, see "Troubleshooting Guide" on page 39.
   - If 115 VAC is available at CON11, pins 1 and 2, and the VBUS LED is not ON, replace the door operator card.

LED Verification and Power Supplies Check
(continued)

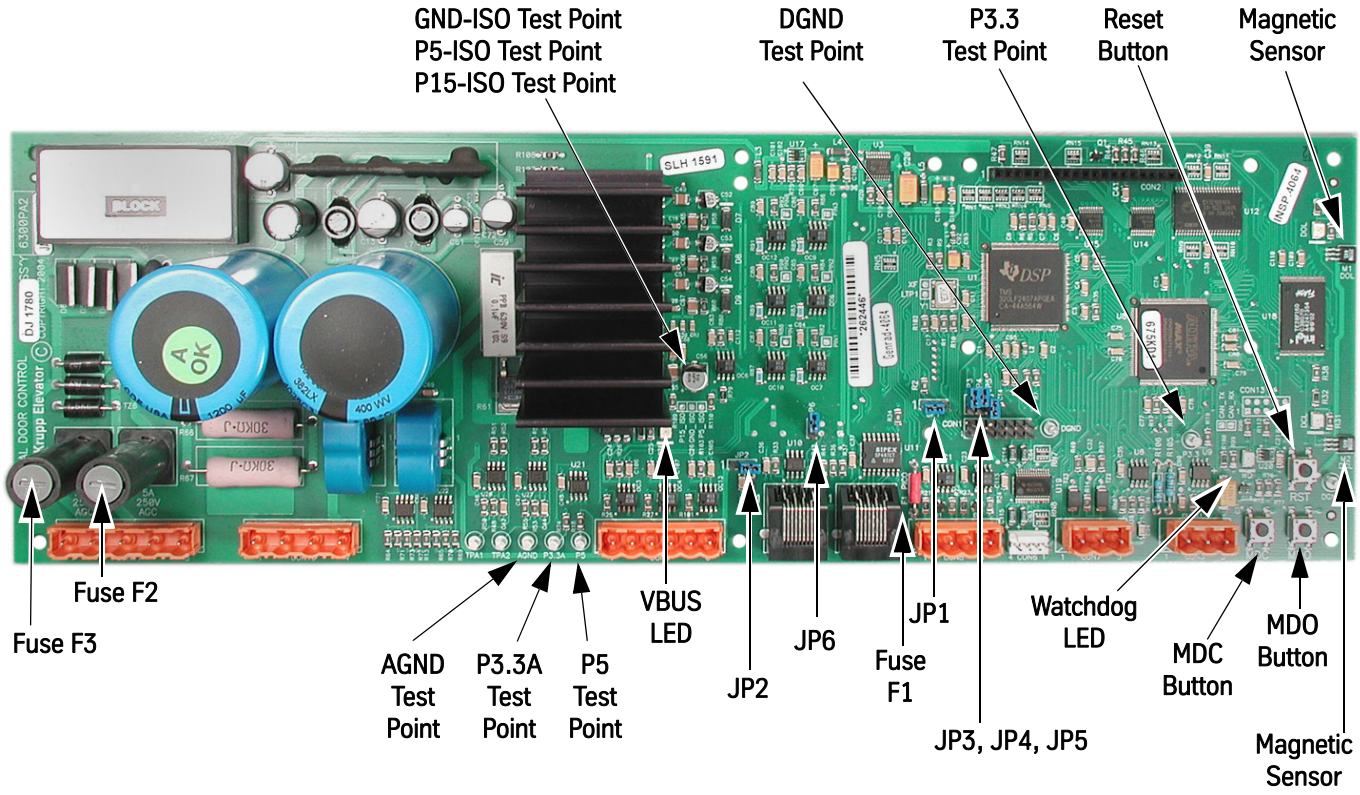

Power Supply	Measurement Locations	Acceptable Voltage Range (VDC)
P5	P5 Test Point to DGND Test Point	4.875 to 5.125
P3.3	P3.3 Test Point to DGND Test Point	3.2 to 3.37
P3.3A	P3.3A Test Point to AGND Test Point	3.2 to 3.4
P5_ISO	P5_ISO Test Point to GND_ISO Test Point	4.5 to 5.5
P15_ISO	P15_ISO Test Point to GND_ISO Test Point	14.625 to 15.375

Figure 4 - Door Card Power Supply Check

Checking the Encoder

Perform this check to ensure that the encoder signals are working properly.

1. Before conducting this test, verify that fuse F1 on the door card is good.
2. Use a digital multimeter, and measure the voltage across fuse F1,
   - If the voltage reads higher than 1.5 volts, replace the fuse.
   - If the voltage reads below 1.5 volts, the fuse is good.

The best way to check the encoder signals is with an oscilloscope. If an oscilloscope is not available, use the digital multimeter method.

Oscilloscope Method

Required tool: An oscilloscope with two working channels.

1. Set the vertical channel to 5V/div.
2. Set the horizontal channel to 1uS/div.
3. Connect the ground leads for both channels to the GND test point.
4. Connect the channel A probe to CON8-2 (PHA).
5. Connect the channel B probe to CON8-3 (PHB).
6. Slowly rotate, by hand, the door motor.

Note: PHA and PHB should be 90 degrees out-of-phase, and toggle between 0 to 1 and 4.5 to 5 volts.

If both signals, PHA and PHB, toggle as they should then the encoder is working. The door card may need replacing.

Digital Multimeter Method

Required tool: A digital multimeter set to measure DC volts.

1. Connect the negative lead to the GND test point, and the positive lead to CON8-2 (PHA).
2. Slowly rotate, by hand, the door motor.

Note: The digital multimeter display should toggle between less than 1 volt and greater than 4 volts.

3. Connect the negative lead to the GND test point, and the positive lead to CON8-3 (PHB).
4. Slowly rotate, by hand, the door motor.

Note: The digital multimeter display should toggle between less than 1 volt and greater than 4 volts.

If both signals, PHA and PHB, toggle as they should then the encoder is working. The door card may need replacing.

Troubleshooting Guide

For assistance, please call 1-866-HELP-TKE.

<table>
<tr><th>Problem</th><th>Possible Causes or Solutions</th></tr>
<tr><td>Doors Run the Opposite Direction When First Powered Up</td><td>1. Change the hand of the operator by changing the LHO adjustment.
2. To verify that the change corrected the problem, press MDO to verify that the doors move in the open direction.
3. Press MDC to verify that the doors move in the close direction.
4. Save this adjustment change to FLASH.</td></tr>
<tr><td>Door Motor Vibrates When Trying to Move the Door</td><td>1. Verify that the proper motor type is selected in the DCM adjustment.
2. Verify that the motor leads are connected per the Motor Connections Chart below.
Note: The motor and encoder connections must match what is shown in the charts below. If any of these connections are not correct, unstable operation will result.
CAUTION
Do not change motor or encoder connections to change door direction. To change door direction, use the LHO Adjustment.
3. Verify that the encoder is connected per the Encoder Connections Chart below.
4. Verify 5 VDC to encoder connector.
• Use a digital multimeter to measure the voltage from CON8-1 to CON8-4. Place the red probe on CON8-1 and the black probe on CON8-4.
• If the voltage reads less than 4.5 volts, check the fuse.
• If the voltage reads above 4.5 volts, check the encoder signals.
5. Verify that the encoder power fuse F1 on the door card is good.
6. Verify that the encoder works.

Motor Connections
<table><tr><th>Connector-Pin</th><th>VFD Cable Wire No.</th><th>AC Motor Leads</th><th>DC Motor Leads</th></tr><tr><td>CON10-2</td><td>1</td><td>1</td><td>no connect</td></tr><tr><td>CON10-4</td><td>2</td><td>2</td><td>Black</td></tr><tr><td>CON10-3</td><td>3</td><td>3</td><td>Red</td></tr><tr><td>GND Screw</td><td>Green</td><td>Green</td><td>no connect</td></tr></table>
Encoder Connections
<table><tr><th>Connector-Pin</th><th>Wire Color</th><th>Signal</th></tr><tr><td>CON8-1</td><td>Red</td><td>P5</td></tr><tr><td>CON8-2</td><td>White</td><td>PHA</td></tr><tr><td>CON8-3</td><td>Green</td><td>PHB</td></tr><tr><td>CON8-4</td><td>Black</td><td>GND</td></tr></table></td></tr>
</table>

Problem (continued)	Possible Causes or Solutions
Doors Will Not Open to FULLY OPEN Position	1. Verify that the DOL limit is adjusted properly, and that the DOL LED comes ON when the magnet is aligned with the hall-effect sensor. 2. Verify that the mechanical stop is set properly and is not interfering with the open cycle. 3. Verify that the drive arms are setup and aligned properly.
Doors Will Not Close to FULLY CLOSED Position	1. Verify that the DCL limit is adjusted properly, and that the DCL LED comes ON when the magnet is aligned with the hall-effect sensor. 2. Verify that the mechanical stop is set properly and is not interfering with the close cycle. 3. Verify that the drive arms are setup and aligned properly.
VBUS LED Will Not Light	1. Verify that the power switch in the operator is in the ON position. 2. Check for 115VAC across pins 1 and 2 of CON11. 3. Check fuse F2 on the door card; Replace if necessary. 4. Verify that the wires for power (those going to CON11) are securely fastened and in the correct place.
WD LED Will Not Light	1. Verify that power switch in operator that is located on the PC card shelf is in the ON position. 2. Check fuse F3 on the door card; Replace if necessary. 3. Verify that the wires for power (those going to CON11) are securely fastened and in the correct place.
DCL or DOL LED Will Not Light	**Note**: The DCL or DOL LEDs will not light unless the magnet cam is aligned with the hall-effect sensor on the end of the card. 1. Verify proper alignment of the magnetic limit cam with the hall-effect sensor. If not aligned properly, adjust the magnetic limit cam on the door operator cam shaft. 2. Verify that the DCI, ELI, and LDO adjustments are all set to 0 (zero). 3. Verify that the power switch in the operator is in the ON position. 4. Check fuse F3 on the door card; Replace if necessary. 5. Verify that the wires for power (those going to CON11) are securely fastened and in the correct place.
Doors Will Not Reverse on Safety Edge Activation	1. Verify that the wires for safety edge signal are securely fastened and in the correct connector. The safety edge signal wire goes to CON9-5 on the UDC. 2. Verify that the SE signal return wire (G24) is connected to CON9-6. 3. Verify that the signal is getting to the UDC card. a. Use a digital multimeter to place the black probe on CON9-6 and the red probe on CON9-5. b. Activate the safety edge, and verify that the digital multimeter reads less than 2 volts. The safety edge input is active low. • If the voltage at CON9 is greater than 2 volts, then the wiring in the safety edge enclosure will have to be changed so that the signal goes low when an obstruction is in the doorway. • Setting IBM4 to 0 will invert the active state for the SE Input.
MDO Starts to Open Doors, But Doors Reclose	Verify that the car is on Inspection Operation. The MDO is overridden by a close door command from the elevator controller.
MDC Starts to Close Doors, But Doors Reopen	Verify that the car is on Inspection Operation. The MDC is overridden by a open door command from the elevator controller, or by an active SE signal.

Problem (continued)	Possible Causes or Solutions
Doors Will Not Set Up	1. Verify that the motor moves the door in the correct direction when MDC or MDO are pushed. 2. Verify that the encoder is connected properly. 3. Verify 5 VDC to the encoder connector. 4. Use a digital multimeter to measure the voltage from CON8-1 to CON8-4. Place the red probe on CON8-1, and the black probe on CON8-4. • If the voltage reads less than 4.5 volts, check the fuse. • If the voltage reads above 4.5 volts, check the encoder signals. 5. Verify that the encoder power fuse F1 on the door card is good. 6. Verify that the encoder works.
Doors Will Not Close After Opening, or Doors Open Without Command and Will Not Close	1. Verify that the SE signal is not active; The SE signal is active low. 2. Use a digital multimeter to place the black probe on CON9-6 and the red probe on CON9-5. 3. Activate the safety edge, and verify that the digital multimeter reads less than 2 volts. **Note**: If the voltage at the CON9 is greater than 2 volts then the wiring in the safety edge enclosure will have to be changed so that the signal goes low when an obstruction is in the door way.
Doors Will Not Move When MDO or MDC Is Pushed	1. Verify that there are no mechanical restrictions or binds. 2. Verify that the IGBT has not been shut down due to a fault. Check faults and follow the instructions for the particular faults that are listed. If the fault listed is the IGBT_FAULT, reset the IGBT power module. 3. If MDO does not work: a. Verify that the car is on Inspection Operation. The MDO is overridden by a close door command from the elevator controller. b. Verify that the DOL limit is not active. If it is active, the doors will not open. If on the DOL limit, move the doors off of the open limit and verify that MDO does cause the doors to open. 4. Verify that the car is on Inspection Operation. The MDC is overridden by an open door command from the elevator controller, or by an active SE signal. 5. If MDC does not work: a. Verify that the DCL limit is not active. If it is active, the doors will not close. If on the DCL limit, move the doors off of the close limit and verify that MDC does cause the doors to open. 6. Verify that VBUS LED is ON. 7. Verify that WD LED is ON. 8. Power down the card, remove the connector to the motor, and power up the card. 9. Connect a voltmeter to the motor output pins; be very careful not to short the pins together. 10. Press MDO or MDC, and verify that there is voltage on the motor output pins. a. If voltage is present, check the motor wiring. If wiring is good, the motor may be bad. b. If no voltage is present, verify that the correct door operator profile is loaded for the type of door and motor being used. If the correct door operator profile is loaded and the IGBT is not faulted out, the card may be damaged.

Maintenance

Change the Door Operator Belt (Single Speed)

1. Turn the 3/8” adjustment screw (located between the idler base and the push bar) clockwise into the idler base to loosen it. See Figure 5 for all steps in this procedure.
2. Loosen the idler base by loosening the two 3/8” bolts on either end of the idler base.
3. Push the idler base toward the push bar.
4. Remove the two #10 hex socket cap screws in the top belt clamp, and remove the top belt clamp.
5. Remove the door operator belt.
6. Measure and cut the new belt to the proper length (if required).

Opening Width	Belt Length
36 inches	98 inches
42 inches	110 inches

7. Use the top belt clamp as a template and match drill two 3/16” holes, one in each end of the belt.
8. Place the belt into position and use the two #10 hex socket cap screws to reinstall the top belt clamp.
9. Turn the adjustment screw counterclockwise from the idler base to tighten the belt for acceptable belt tension.
10. Tighten the two 3/8" bolts on either end of the idler base.

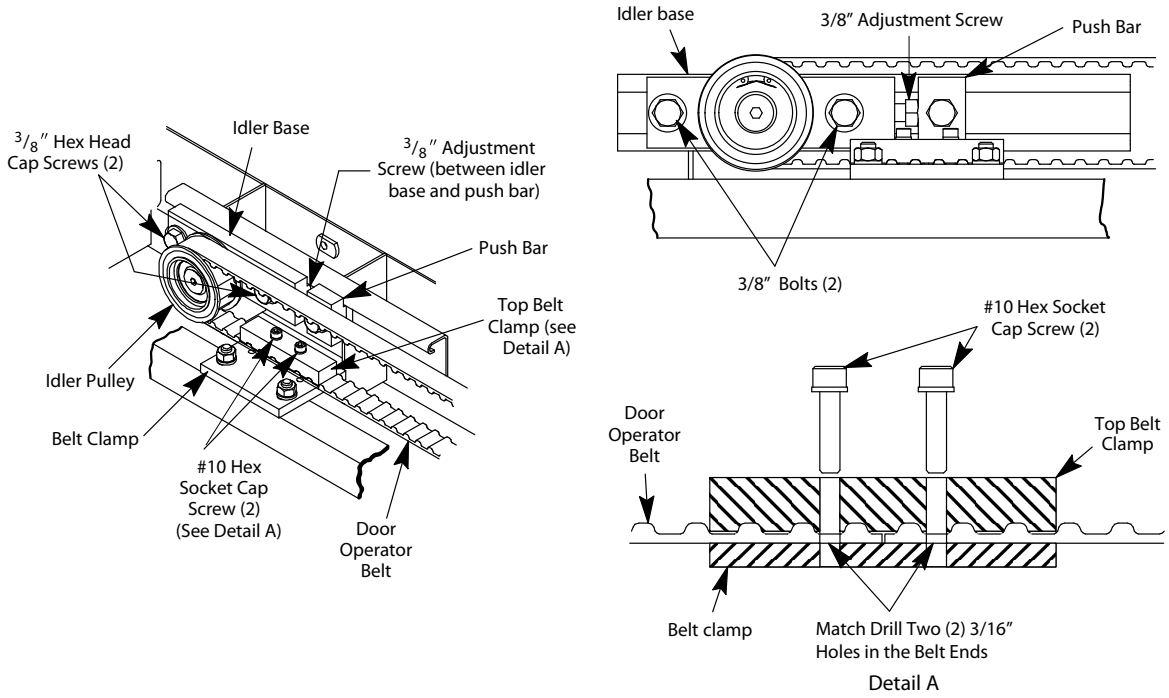

Figure 5 - Change Single Speed Door Operator Belt

Change the Door Operator Belt (Center Opening)

1. Turn the 3/8” adjustment screw (located between the idler base and the push bar) clockwise into the idler base to loosen it. See Figure 6 for all steps in this procedure.
2. Loosen the idler base by loosening the two 3/8” bolts on either end of the idler base.
3. Push the idler base toward the push bar.
4. Remove the two #10 hex socket cap screws in the top belt clamp, and remove the top belt clamp.
5. Remove the door operator belt.
6. Measure and cut the new belt to the proper length (if required).

Opening Width	Belt Length
42 inches	151 inches

7. Use the top belt clamp as a template and match drill two 3/16” holes, one in each end of the belt.
8. Place the belt into position, and use the two #10 hex socket cap screws to reinstall the top belt clamp.
9. Use four #10 hex socket cap screws to reinstall the center opening belt clamp on the belt brace clamp.
10. Turn the adjustment screw counterclockwise from the idler base to tighten the belt for acceptable belt tension.
11. Tighten the two 3/8" bolts on either end of the idler base.

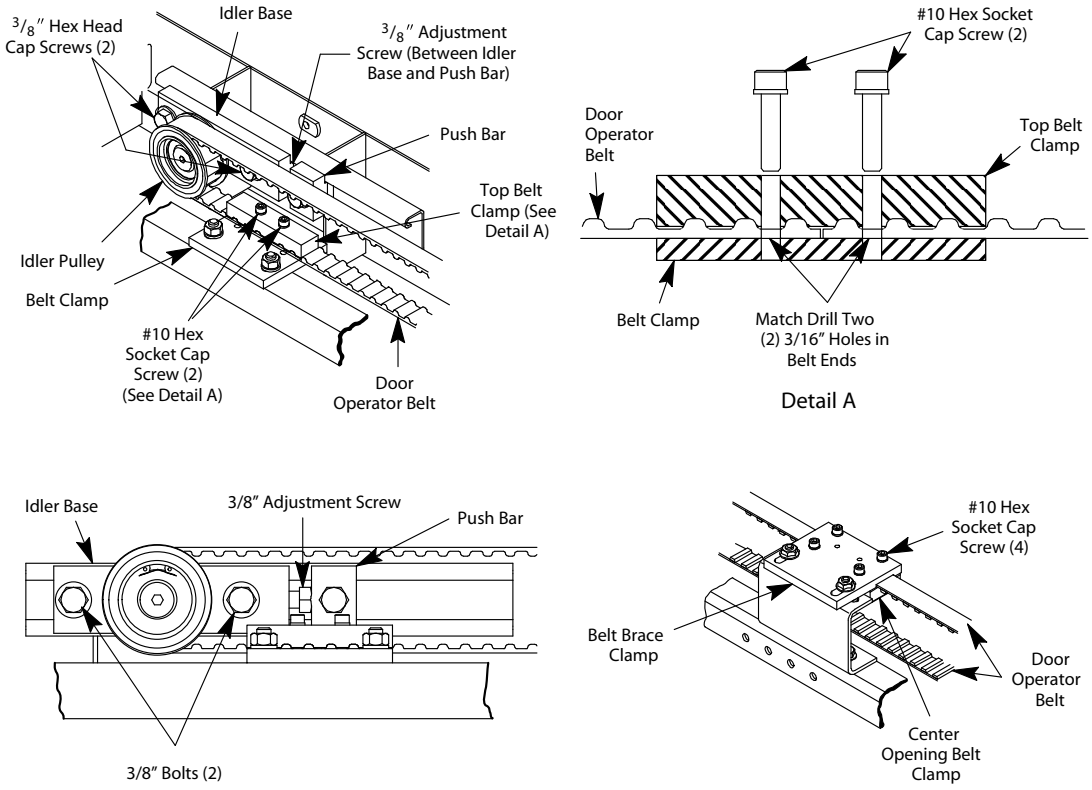

Figure 6 - Change Center Opening Door Operator Belt

Replacement Parts

1504BK Single Speed Left and Right Hand Assemblies

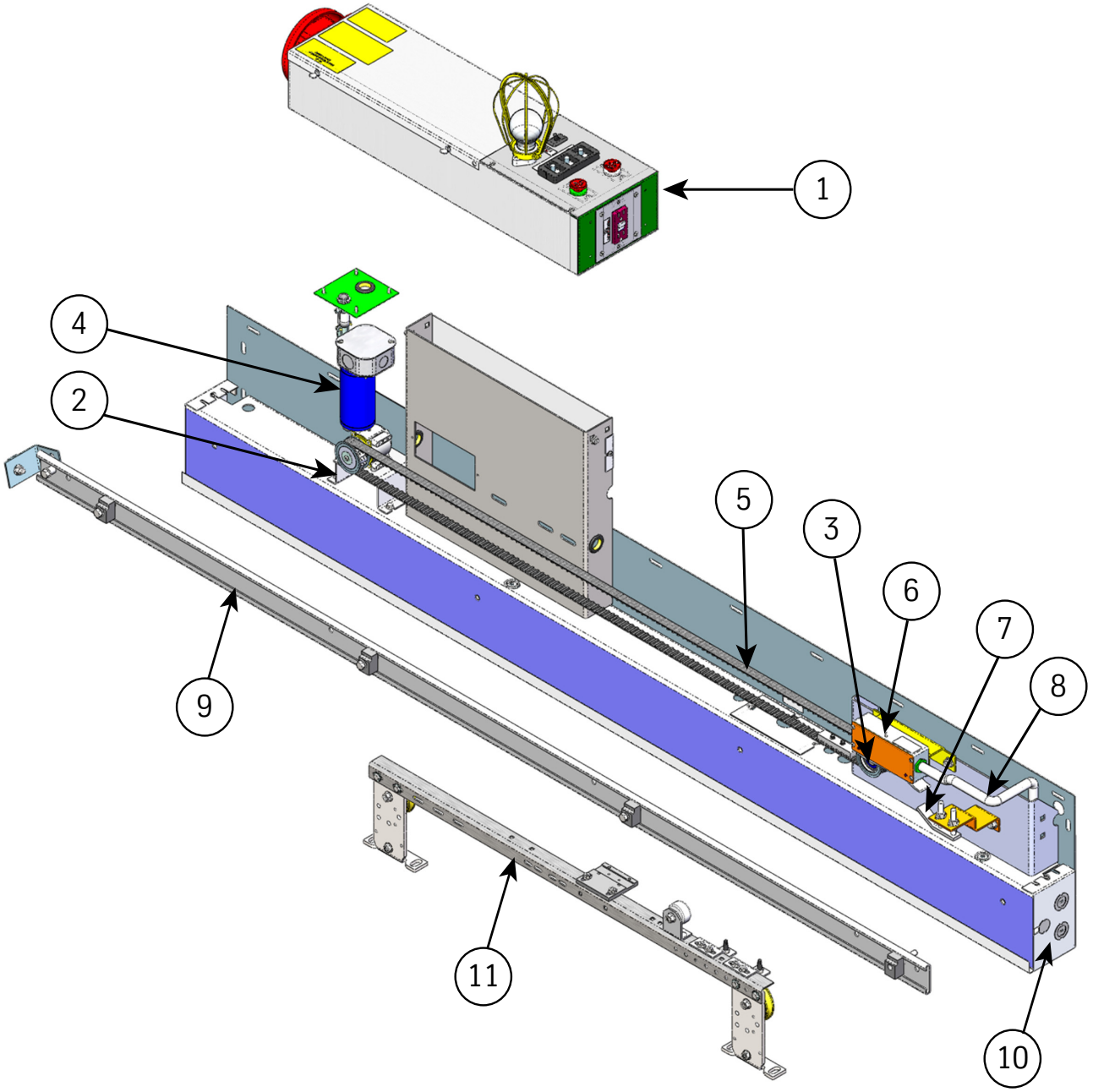

1504BK Single Speed Left and Right Hand Assemblies
(continued)

ITEM	PART NO.	PRINT NO.	DESCRIPTION
1		186CP	Box Assembly, Car Top
2		596DB2	Mount, Motor
3		677AG1	Pulley, Assembly, Idler
4	9817920	590DA2	Motor, Assembly, Belt Pulley
5		125AD2	Belt, Drive, 36" Opening
		125AD3	Belt, Drive, 42" Opening
6		171EP3	Switch Assembly, Gate, Single Speed
7		69865	Cam Assembly, Safety Edge Pickup
8	9834526	596CP1	Mount, Magnetic Sensor
9		286AT1	Conduit, Flexible, Aluminum, .375 x 15.00
10		232DC001	Cap, Header, End
11		860AD1	Track, Door, Car
12		461CJ1	Hanger Assembly, Car, LH, 36" Opening
		461CJ2	Hanger Assembly, Car, LH, 42" Opening
		461CJ4	Hanger Assembly, Car, RH, 36" Opening
		461CJ5	Hanger Assembly, Car, RH, 42" Opening
(Parts not shown/not labeled in drawing)			
13		461AJ1	Hanger, Pad Button, #4 Stainless Steel
		461AJ4	Hanger, Pad Button, #8 Stainless Steel
		461AJ3	Hanger, Pad Button, #4 Bronze
		461AJ5	Hanger, Pad Button, #8 Bronze
14		320JP3	Cover, Support, Car Top Box
15		717CJ2	O-Ring, 0.062" x 0.750" (ID) x 0.875" (OD)
16		448AB1	Grommet, Rubber, 1.062 Hole, .875 (ID)
17	9952172	146693	Spacer, Track
18	9801121	40114	Spacer, Interlock
19		123794	Support, Cord, Safety Edge
20	9811291	41129	Clip, Cable, Electrical
21		274CF1	Clamp, Belt
22		196ALE1	Bracket, Cam Pickup
23		196ALH2	Bracket, Weldment, Idler Pulley Adjustment
24		286AG6	Conduit, Connector, Screw-in, .375 Zinc, Flex

1504BL Center Opening Assemblies

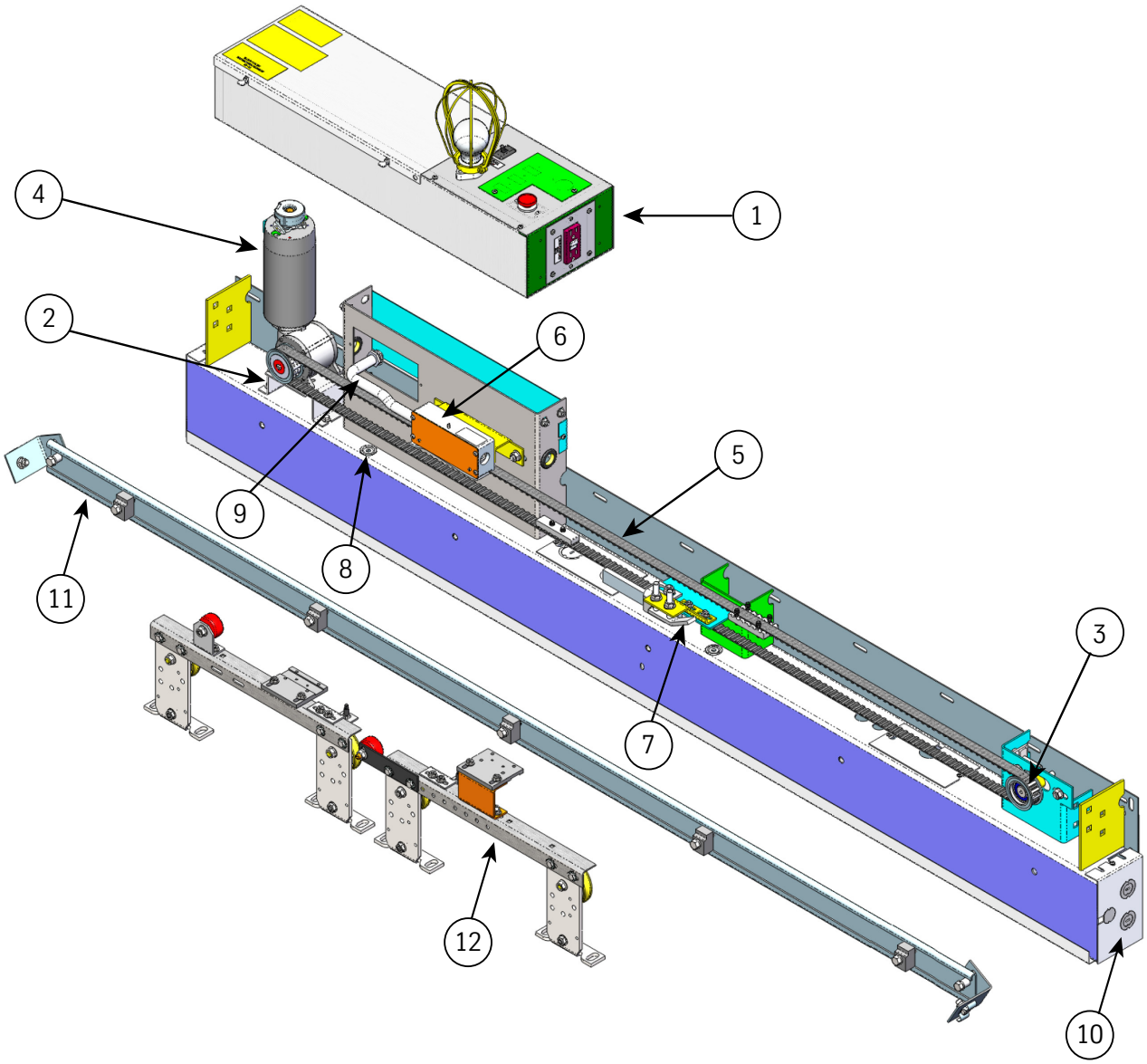

1504BL Center Opening Assemblies
(continued)

ITEM	PART NO.	PRINT NO.	DESCRIPTION
1		186CP	Box Assembly, Car Top
2		596DB2	Mount, Motor
3		677AG1	Pulley, Assembly, Idler
4	9817920	590DA2	Motor Assembly, Belt Pulley
5		125AD10	Belt, Drive, 36" Opening
		125AD11	Belt, Drive, 42" Opening
		125AD12	Belt, Drive, 48" Opening
6		171EP3	Switch Assembly, Gate
7		69865	Cam Assembly, Safety Edge Pickup
8	9834526	596CP1	Mount, Magnetic Sensor
9		286AT1	Conduit, Flexible, Aluminum, .375 x 15.00
10		232DC001	Cap, Header, End
11		127035	Track, Door, Car
12		461CK1	Hanger Assembly, Car, LH, 36" Opening
		461CK2	Hanger Assembly, Car, LH, 42" Opening
		461CK4	Hanger Assembly, Car, LH, 48" Opening
		461CL1	Hanger Assembly, Car, RH, 36" Opening
		461CL2	Hanger Assembly, Car, RH, 42" Opening
		461CL4	Hanger Assembly, Car, RH, 48" Opening
(Parts not shown/not labeled in drawing)			
13		461AJ1	Hanger, Pad Button, #4 Stainless Steel
		461AJ4	Hanger, Pad Button, #8 Stainless Steel
		461AJ3	Hanger, Pad Button, #4 Bronze
		461AJ5	Hanger, Pad Button, #8 Bronze
14		274CF1	Clamp, Belt
15		274CH1	Clamp, Belt, CO
16		196AJT1	Bracket, Cam Pickup Mounting
17		166AP1	Catch Assembly, Safety
18		717CJ2	O-Ring, 0.062" x 0.750" (ID) x 0.875" (OD)
19		448AB1	Grommet, Rubber, 1.062 Hole, .875 (ID)
20	9952172	146693	Spacer, Track
21	9801121	40114	Spacer, Interlock
22		123794	Support, Cord, Safety Edge
23	9811291	41129	Clip, Cable, Electrical
24		196ALH2	Bracket, Weldment, Idler Pulley Adjustment
25		286AG6	Conduit, Connector, Screw-in, .375 Zinc, Flex

1504BV 2-Speed Left and Right Hand Assemblies

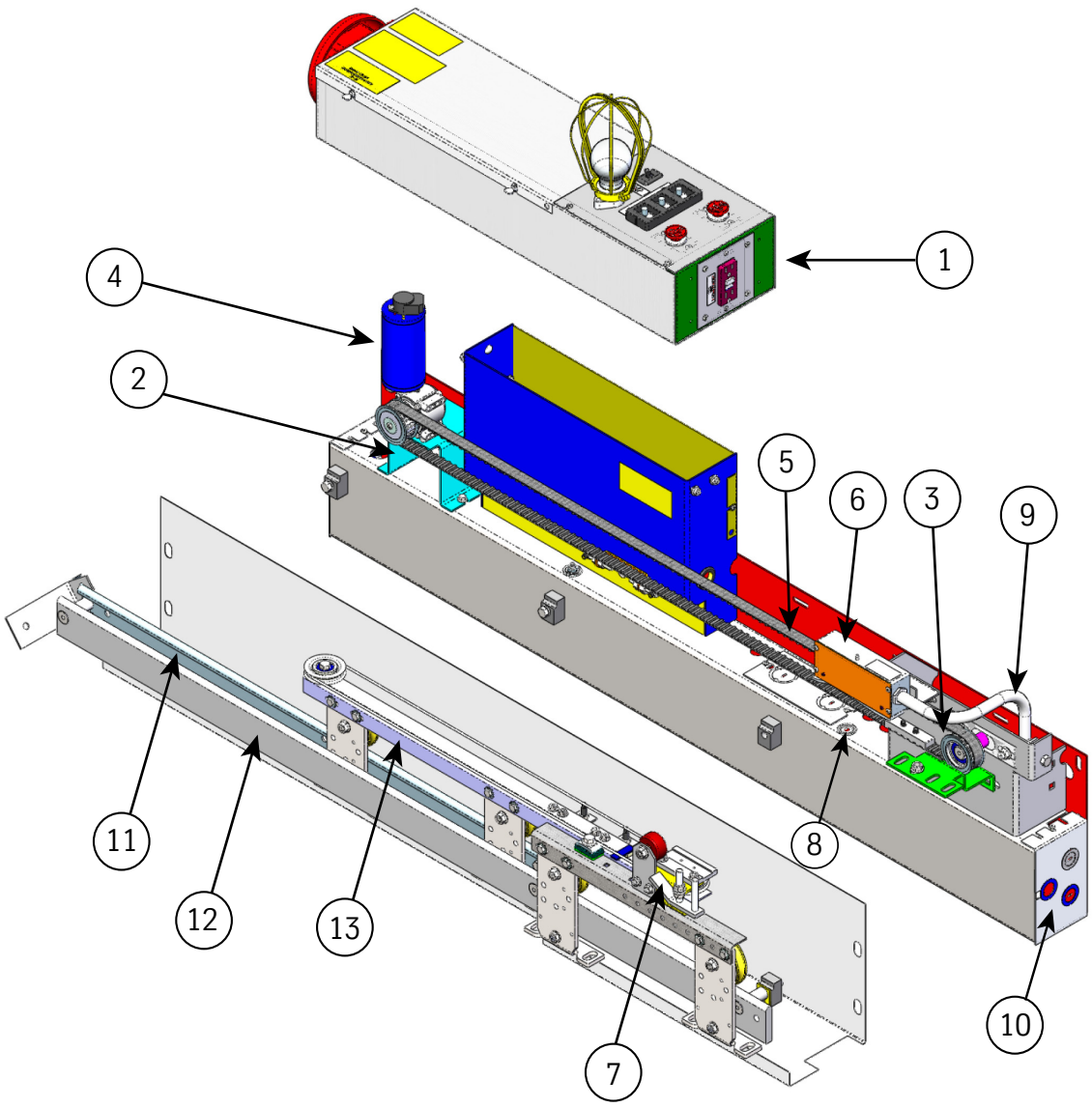

1504BV 2-Speed Left and Right Hand Assemblies

(continued)

ITEM	PART NO.	PRINT NO.	DESCRIPTION
1		186CP	Box Assembly, Car Top
2		596FE001	Mount, Motor
3		677AG1	Pulley, Assembly, Idler
4	9817920	590DA2	Motor Assembly, Belt Pulley
5		125AD7	Belt, Drive, 36" Opening
		125AD8	Belt, Drive, 48" Opening
		125AD9	Belt, Drive, 54" Opening
6		171EP3	Switch Assembly, Gate
7		69865	Cam Assembly, Safety Edge Pickup
8	9834526	596CP1	Mount, Magnetic Sensor
9		286AT1	Conduit, Flexible, Aluminum, .375 x 15.00
10		232DC001	Cap, Header, End
11		125908	Track, Door, Rolled, Formed
12		860AF1	Track Door, Solid
13		461CE1	Hanger Assembly, Car, Fast Door, RH, 36" Opening
		461CE2	Hanger Assembly, Car, Fast Door, RH, 48" Opening
		461CE3	Hanger Assembly, Car, Fast Door, RH, 54" Opening
		461CE5	Hanger Assembly, Car, Fast Door, LH, 36" Opening
		461CE6	Hanger Assembly, Car, Fast Door, LH, 48" Opening
		461CE7	Hanger Assembly, Car, Fast Door, LH, 54" Opening
		461CF1	Hanger Assembly, Car, Slow Door, RH, 36" Opening
		461CF2	Hanger Assembly, Car, Slow Door, RH, 48" Opening
		461CF3	Hanger Assembly, Car, Slow Door, RH, 54" Opening
		461CF5	Hanger Assembly, Car, Slow Door, LH, 36" Opening
		461CF6	Hanger Assembly, Car, Slow Door, LH, 48" Opening
		461CF7	Hanger Assembly, Car, Slow Door, LH, 54" Opening
(Parts not shown/not labeled in drawing)			
14		461AJ1	Hanger, Pad Button, #4 Stainless Steel
		461AJ4	Hanger, Pad Button, #8 Stainless Steel
		461AJ3	Hanger, Pad Button, #4 Bronze
		461AJ5	Hanger, Pad Button, #8 Bronze
15		274CF1	Clamp, Belt
16		196AJB3	Bracket, Cam Pickup
17		717CJ2	O-Ring, 0.062" x 0.750" (ID) x 0.875" (OD)
18		448AB1	Grommet, Rubber, 1.062 Hole, .875 (ID)
19	9952172	146693	Spacer, Track
20		123794	Support, Cord, Safety Edge
21	9811291	41129	Clip, Cable, Electrical
22		196ALH2	Bracket, Weldment, Idler Pulley Adjustment
23		286AG6	Conduit, Connector, Screw-in, .375 Zinc, Flex

186CP Car Top Box

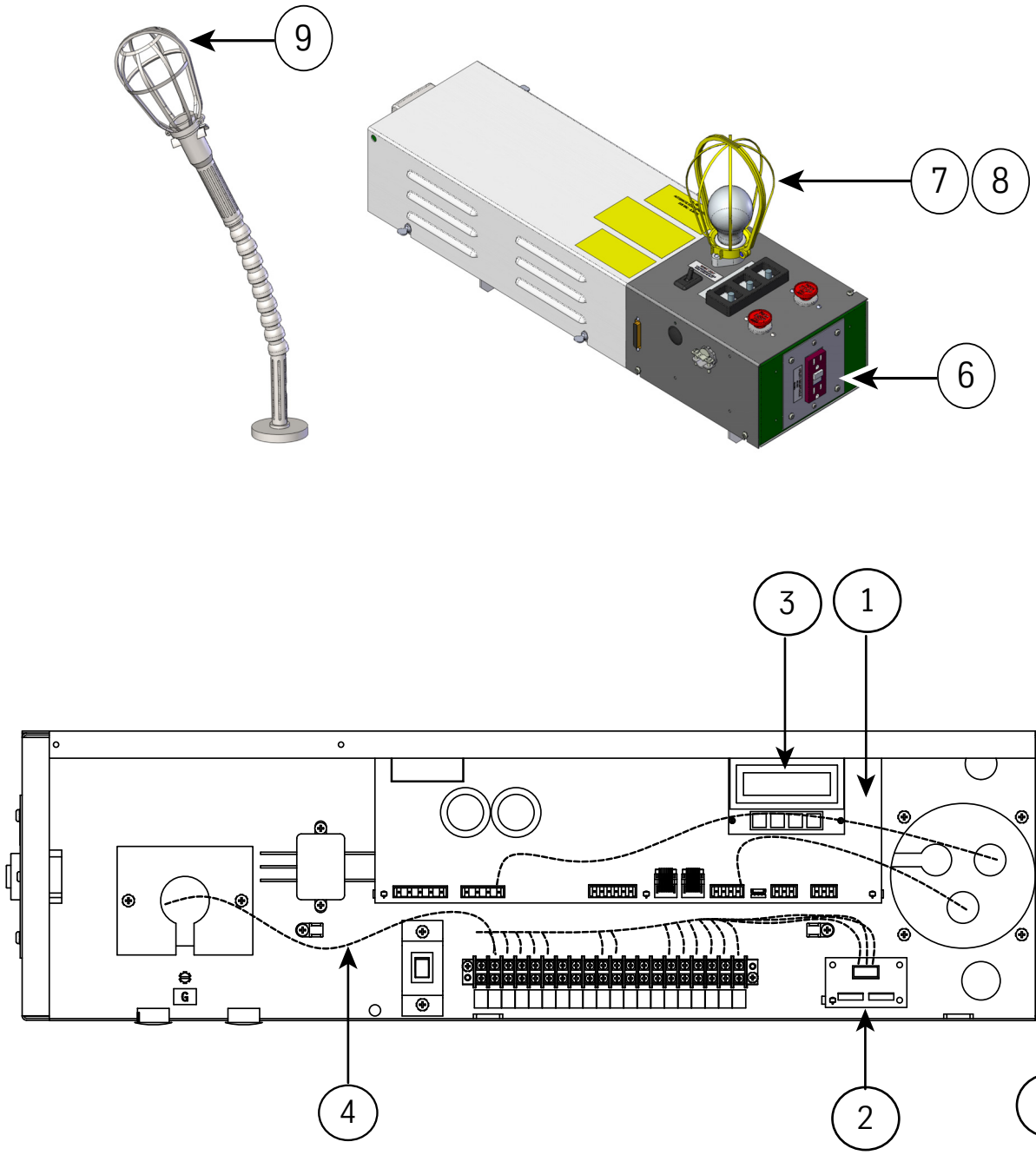

Right Hand View, Top Cover Removed

186CP Car Top Box
(continued)

ITEM	PART NO.	PRINT NO.	DESCRIPTION
1	9863877	6300PA3	PCB Assy, Universal Door Controller (UDC)
2	9765841	6300WK1	PCB Assembly, SE Interface
3	9876954	6300HL1	PCB Assembly, VVVF User Interface Tool (UIT)
4		462LD1	Harness Assy, Linear Door Operator, Front
		462LD2	Harness Assy, Linear Door Operator, Rear
		462MG1	Harness Assy, Linear Door Operator, Cimarron
		462LE1	Harness Assy, DK Encoder, LD-03
		462LD3	Harness Assy, Linear Door Operator, Front, Extended
		462LD4	Harness Assy, Linear Door Operator, Rear, Extended
5	9782527	108252	Audible, Emergency Alarm Bell
	9736254	177AM1	Audible, Signal Alarm Horn, 12V
6		687BR1	Receptacle, Ground Fault Circuit Interrupter
7	9781821	78182	Socket, Light
8		109789	Guard, Lamp
9	9875412	850RW1	Tools, Magnetic-Based Trouble Light
(Parts not shown/not labeled in drawing)			
10	9743637	76703	Switch, Light, Snap-in
11	9748632	127195	Guard, Pushbutton
12	9739555	127196	Switch, Pushbutton
13	9810985	109888	Switch Assembly, Inspection
	9810857	108150	Switch Assembly, Run-Stop
14		286AH37	NM Connector, Zinc Die Cast, .500

This page
intentionally
left blank.

Vertical Express

P.O. Box 2019 Memphis, TN 38101 Tel: (866) 448-3789 (toll-free) Fax: (901) 261-1807 www.verticalxpress.com

All illustrations and specifications are based on information in effect at the time of publication approval. Vertical Express reserves the right to change specification or designs and to discontinue items without prior notification or obligation. v.Y.m. Copyright © 2012 Vertical Express Elevator